TECHNOFORM

Structural calculations for thermal isolator clip system (4")

Insulation solutions
for windows, doors,
and facades

TABLE OF CONTENTS

TOPIC	PAGE
EXECUTIVE SUMMARY	3
BASIS OF DESIGN	4
THERMAL CLIP DETAILS	6
THERMAL CLIP ANALYSIS (ATTACHED TO 18 GA COLD FORMED METAL STUDS)	9
THERMAL CLIP ANALYSIS (ATTACHED TO 16 GA COLD FORMED METAL STUDS)	18
THERMAL CLIP ANALYSIS (ATTACHED TO WOOD STUDS)	27
THERMAL CLIP ANALYSIS (ATTACHED TO CONCRETE WALL)	33
THERMAL CLIP ANALYSIS (ATTACHED TO HOLLOW CORE CMU WALL)	41
STRUCTURAL TABLES (CLIP QUANTITY ESTIMATING TABLES)	49
• CLIPS ATTACHED TO 18 GA COLD FORMED METAL STUDS	50
• CLIPS ATTACHED TO 16 GA COLD FORMED METAL STUDS	51
• CLIPS ATTACHED TO WOOD STUDS	52
• CLIPS ATTACHED TO CONCRETE WALL	53
• CLIPS ATTACHED TO HOLLOW CORE CMU WALL	54

EXECUTIVE SUMMARY

1. This calculation package represents the structural engineering review of the Technoform Thermal Clip spacer used for attachment of building cladding panel systems to the structural building substrate.
2. The Technoform Thermal Clip is manufactured from polyamide material with 40% glass fiber content and includes an aluminum extrusion component which provides the structural element for adequate fastening to the building structure and provides sufficient material for the panel system attachment screw thread engagement.
3. See "Thermal Clip Details" section of this package for an illustration of the Technoform Thermal Clip spacer.
4. This calculation package provides analysis for the basis of design of the thermal clip spacer when used with a common range of design wind pressures and panel system weights. See "Basis of Design" section of this package for specific design load ranges.
5. This calculation package includes evaluation of the thermal clip when attached to various building substrate conditions. The various building substrate conditions reviewed in this package include attachment to cold formed metal studs, wood studs, concrete and CMU. See "Basis of Design" section of this package for specific design considerations taken when attaching to each type of building substrate condition.
6. This package also includes structural tables which provide the user with an estimating tool for determining the quantity of thermal clips required for a particular project. The structural tables have been generated and are based on the engineering calculation methods enclosed in this package.

BASIS OF DESIGN

1. The square footage basis of design for this thermal clip product has been considered to be one clip per four square feet of panel cladding system.

2. The wind load pressures utilized for the basis of this thermal clip product have been considered in the range of 30 psf to 50 psf allowable wind pressures.

3. The panel cladding system weights utilized for the basis of this design have been considered in the range of 4.0 psf to 7.7 psf which includes, but is not limited to ACM panel systems, solid metal panel system & high performance concrete panel systems.

4. The screws attaching the panel system to the thermal block clip have been considered to be (2) ¼-14 HWH Dril-Flex fasteners at each thermal clip.

5. The fasteners attaching the thermal clip to a building substrate consisting of 18 gauge cold formed metal studs have been considered to be (2) ¼-14 HWH Dril-Flex fasteners at each thermal clip.
    a. The cold formed metal studs considered in this attachment design are standard strength metals studs with yield strength Fy=33 ksi minimum & ultimate strength Fu=45 ksi minimum.

6. The fasteners attaching the thermal clip to a building substrate consisting of 16 gauge cold formed metal studs have been considered to be (2) ¼-14 HWH Dril-Flex fasteners at each thermal clip.
    a. The cold formed metal studs considered in this attachment design are standard strength metals studs with yield strength Fy=33 ksi minimum & ultimate strength Fu=45 ksi minimum.

7. The fasteners attaching the thermal clip to a building substrate consisting of structural wood studs have been considered to be (2) #14 wood screws with bending yield strength Fyb=70 ksi minimum with 1 ½" minimum penetration into the structural wood stud.
    a. The structural wood studs considered in this attachment are Spruce-Pine-Fir with a specific gravity G=0.42 minimum.

8. The fasteners attaching the thermal clip to a building substrate consisting of solid concrete have been considered to be (2) ¼" Diameter Hilti Kwik-Con II+ Concrete and Masonry Screws with 1" nominal embedment into the structural concrete.
    a. The concrete considered in this attachment design is 6" thick, NW concrete with minimum compressive strength f'c=3000 psi.

9. The fasteners attaching the thermal clip to a building substrate consisting of hollow core concrete masonry units (CMU) have been considered to be (2) ¼" Diameter Hilti Kwik-Con II+ Concrete and Masonry Screws with 1" nominal embedment into the CMU.
    a. The CMU considered in this attachment design is 6" thick, LW, MW or NW hollow core concrete masonry units with minimum compressive strength f'c=1500 psi.

THERMAL CLIP DETAILS

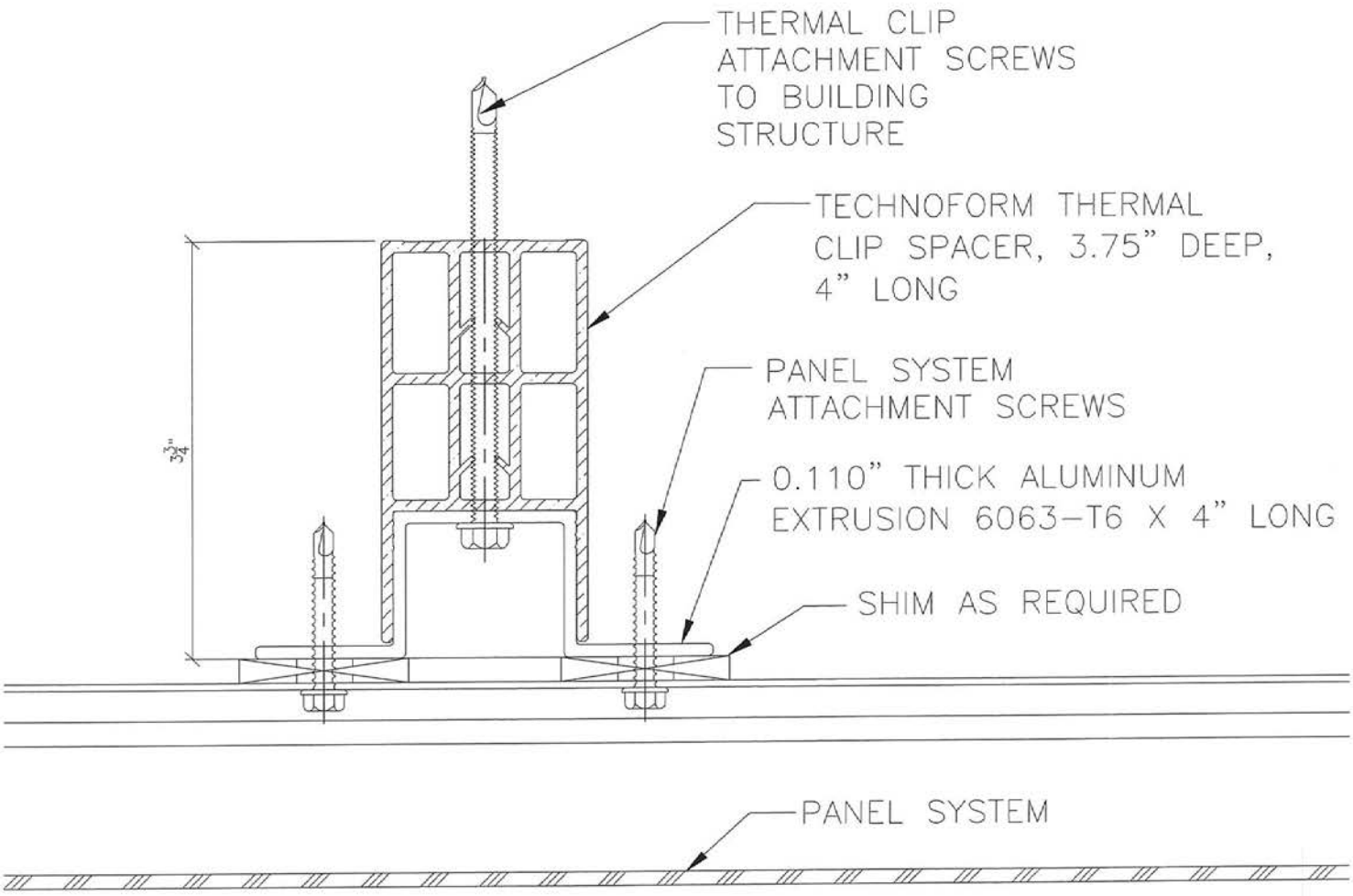
THERMAL CLIP ATTACHMENT SCREWS TO BUILDING STRUCTURE
TECHNOFORM THERMAL CLIP SPACER, 3.75" DEEP, 4" LONG
PANEL SYSTEM ATTACHMENT SCREWS
0.110" THICK ALUMINUM EXTRUSION 6063-T6 X 4" LONG
SHIM AS REQUIRED
3 3/4"
PANEL SYSTEM

PLAN DETAIL

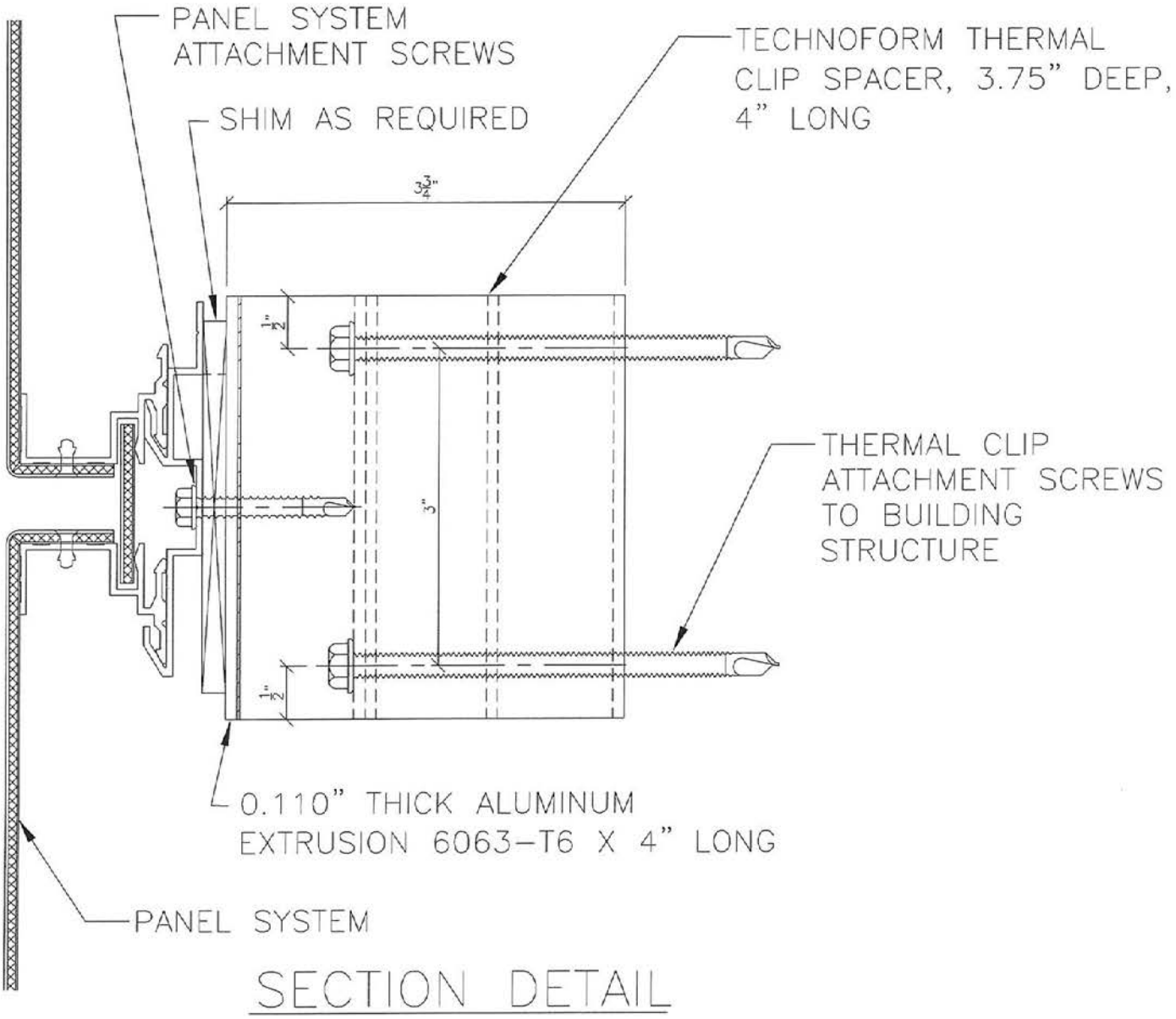
PANEL SYSTEM
ATTACHMENT SCREWS
SHIM AS REQUIRED
TECHNOFORM THERMAL
CLIP SPACER, 3.75" DEEP,
4" LONG
3¾"
1½"
3"
1½"
THERMAL CLIP
ATTACHMENT SCREWS
TO BUILDING
STRUCTURE
0.110" THICK ALUMINUM
EXTRUSION 6063-T6 X 4" LONG
PANEL SYSTEM
SECTION DETAIL

THERMAL CLIP ANALYSIS

(ATTACHED TO 18 GAUGE COLD FORMED METAL STUDS)

Thermal Clip Anlaysis: Attached to 18 Gauge Cold Formed Metal Studs

Basis of Design Information

$S_{studs} := 16in$ (Typical Wall Construction - On Center Stud Spacing)

$S_{t_clip} := 36in$ (Thermal Clip Spacing Along Vertical Studs - Basis of Design Clip Spacing)

$A := S_{studs} \cdot S_{t_clip} = 4\,ft^2$ (Panel Area Per Thermal Clip - Basis of Design)

$WL_{tz} := 30 \cdot psf$ (Basis of Design Wind Pressure - Typical Wind Zone of Building)

$WL_{cz} := 50 \cdot psf$ (Basis of Design Wind Pressure - Corner Wind Zone of Building)

$DL_{pnl_light} := 2.0 \cdot psf$ (Basis of Design "Light" Panel Weight - 1/8" Solid Aluminum or 4mm ACM)

$DL_{pnl_heavy} := 5.7 \cdot psf$ (Basis of Design "Heavy" Panel Weight - 1/2" TATKL)

$DL_{misc} := 2.0 \cdot psf$ (Basis of Design Miscellanleous Materials - Extrusions / Z-Girts of Panel System)

Basis of Design Load Determination

Wind Load Reaction Per Thermal Clip

$P_{clip_WL_tz} := A \cdot WL_{tz} = 120\,lb$ (Wind Load Reaction at Clips in Typical Zone Wind Region)

$P_{clip_WL_cz} := A \cdot WL_{cz} = 200\,lb$ (Wind Load Reaction at Clips in Corner Zone Wind Region)

Dead Load Reaction Per Thermal Clip

$P_{clip_DL_light} := A \cdot (DL_{pnl_light} + DL_{misc}) = 16\,lb$ (Dead Load Reaction - Light Panels)

$P_{clip_DL_heavy} := A \cdot (DL_{pnl_heavy} + DL_{misc}) = 31\,lb$ (Dead Load Reaction - Heavy Panels)

Check 1/4-14 Dril-Flex into 0.100" 6063-T6 Aluminum Material (Fy=25 ksi min., Fu=30 ksi min.)

$d_1 := 0.25in$ (Screw Diameter)

$t_{alum} := 0.100in$ (Aluminum Thickness)

$F_{y_alum} := 25 \cdot ksi$ (Minimum Yield Strength of Aluminum)

$F_{u_alum} := 30 \cdot ksi$ (Minimum Ultimate Strength of Aluminum)

Allowable Shear / Bearing Capacity of Screws

$V_{a_screw_AAMA} := 621 \cdot lb$ (Screw Shear Strength Per AAMA TIR-A9-14)

$V_{a_screw_ESR3332} := \frac{2692 \cdot lb}{3} = 897\ lb$ (Screw Shear Strength Per ESR-3332)

$V_{a_screw_ADM} := \frac{2d_1 \cdot t_{alum} \cdot F_{u_alum}}{3} = 500\ lb$ (Screw Shear Bearing Strength Per Aluminum Design Manual 2010 Edition)

$V_{a_screw} := \min(V_{a_screw_AAMA}, V_{a_screw_ESR3332}, V_{a_screw_ADM}) = 500\ lb$

Allowable Tensile / Pull-Out Capacity of Screws

$T_{a_screw_AAMA} := 1075 \cdot lb$ (Screw Tensile Strength Per AAMA TIR-A9-14)

$T_{a_screw_ESR3332} := \frac{4363 \cdot lb}{3} = 1454\ lb$ (Screw Tensile Strength Per ESR-3332)

$T_{a_screw_pullout_AAMA} := 236 \cdot lb$ (Screw Pullout Strength Per AAMA TIR-A9-14)

$T_{a_screw} := \min(T_{a_screw_AAMA}, T_{a_screw_ESR3332}, T_{a_screw_pullout_AAMA}) = 236\ lb$

Check (2) Screws at Each Panel Connection to Thermal Clip

Shear in Screws at Light Panels

$V_{max_light} := \frac{P_{clip_DL_light}}{2} = 8\ lb$ < $V_{a_screw} = 500\ lb$

$if(V_{max_light} < V_{a_screw}, "O.K.", "N.G.") = "O.K."$

Shear in Screws at Heavy Panels

$V_{max_heavy} := \frac{P_{clip_DL_heavy}}{2} = 15\ lb$ < $V_{a_screw} = 500\ lb$

$if(V_{max_heavy} < V_{a_screw}, "O.K.", "N.G.") = "O.K."$

Tension in Screws at Panels in Typical Wind Zones

$T_{max_tz} := \frac{P_{clip_WL_tz}}{2} = 60\ lb$ < $T_{a_screw} = 236\ lb$

$if(T_{max_tz} < T_{a_screw}, "O.K.", "N.G.") = "O.K."$

Tension in Screws at Panels in Corner Wind Zones

$T_{max_cz} := \frac{P_{clip_WL_cz}}{2} = 100\,lb$ < $T_{a_screw} = 236\,lb$

$if(T_{max_cz} < T_{a_screw}, "O.K.", "N.G.") = "O.K."$

Check 1/4-14 Dril-Flex into 18 ga. Metal Stud Framing (Fy=33 ksi min., Fu=45 ksi min.)

$d_2 := 0.25in$ (Screw Diameter)

$t_{stud} := 0.048in$ (Metal Stud Thickness)

$t_{stud_SSMA} := 0.0451in$ (SSMA Metal Stud Thickness)

$F_{y_stud} := 33 \cdot ksi$ (Minimum Yield Strength of Metal Studs)

$F_{u_stud} := 45 \cdot ksi$ (Minimum Ultimate Strength of Metal Studs)

Allowable Shear / Bearing Capacity of Screws

$V_{a_screw2_AAMA} := 621 \cdot lb$ (Screw Shear Strength Per AAMA TIR-A9-14)

$V_{a_screw2_ESR3332} := \frac{2692 \cdot lb}{3} = 897\,lb$ (Screw Shear Strength Per ESR-3332)

$V_{a_screw2_ESR3332_brg} := 377 \cdot lb$ (Screw Shear Bearing Strength Per ESR-3332)

$V_{a_screw2_DF} := \frac{1395 \cdot lb}{3} = 465\,lb$ (Screw Shear Bearing Strength Per Dril-Flex)

$V_{a_screw2_AISI} := \frac{4.2\sqrt{t_{stud}^3 \cdot d_2} \cdot F_{u_stud}}{3} = 331\,lb$ (Screw Shear Bearing Strength Per AISI Cold Formed Steel Design 2008 Edition)

$V_{a_screw2_SSMA} := \frac{4.2\sqrt{t_{stud_SSMA}^3 \cdot d_2} \cdot F_{u_stud}}{3} = 302\,lb$ (Screw Shear Bearing Strength Per AISI Cold Formed Steel Design 2008 Edition-SSMA)

$V_{a_screw2_shear} := \min(V_{a_screw2_AAMA}, V_{a_screw2_ESR3332}) = 621\,lb$

$V_{a_screw2_bearing} := \min(V_{a_screw2_ESR3332_brg}, V_{a_screw2_DF}, V_{a_screw2_AISI}, V_{a_screw2_SSMA}) = 302\,lb$

$V_{a_screw2} := \min(V_{a_screw2_shear}, V_{a_screw2_bearing}) = 302\,lb$

Allowable Tensile / Pull-Out Capacity of Screws

$T_{a_screw2_AAMA} := 1075 \cdot lb$ (Screw Tensile Strength Per AAMA TIR-A9-14)

$T_{a_screw2_ESR3332} := \frac{4363 \cdot lb}{3} = 1454\,lb$ (Screw Tensile Strength Per ESR-3332)

$T_{a_screw2_ESR3332_po} := 131\,lb = 131\,lb$ (Screw Tensile Pull-Out Strength Per ESR-3332)

$T_{a_screw2_DF} := \frac{398 \cdot lb}{3} = 133\,lb$ (Screw Tensile Pull-Out Strength Per Dril-Flex)

$T_{a_screw2_AISI} := \frac{0.85 t_{stud} \cdot d_2 \cdot F_{u_stud}}{3} = 153\,lb$ (Screw Tensile Pull-Out Strength Per AISI Cold Formed Steel Design 2008 Edition)

$T_{a_screw2_SSMA} := \frac{0.85 t_{stud_SSMA} \cdot d_2 \cdot F_{u_stud}}{3} = 144\,lb$ (Screw Tensile Pull-Out Strength Per AISI Cold Formed Steel Design 2008 Edition-SSMA)

$T_{a_screw2_tension} := \min(T_{a_screw2_AAMA}, T_{a_screw2_ESR3332}) = 1075\,lb$

$T_{a_screw2_pullout} := \min(T_{a_screw2_ESR3332_po}, T_{a_screw2_DF}, T_{a_screw2_AISI}, T_{a_screw2_SSMA}) = 131\,lb$

$T_{a_screw2} := \min(T_{a_screw2_tension}, T_{a_screw2_pullout}) = 131\,lb$

Check (2) Screws at Each Thermal Clip Connection to Metal Stud Wall

Shear in Screws at Light Panels

$V_{max_light2} := \frac{P_{clip_DL_light}}{2} = 8\,lb \quad < \quad V_{a_screw2} = 302\,lb$

$\text{if}(V_{max_light2} < V_{a_screw2}, \text{" O.K. "}, \text{" N.G. "}) = \text{" O.K. "}$

Shear in Screws at Heavy Panels

$V_{max_heavy2} := \frac{P_{clip_DL_heavy}}{2} = 15\,lb \quad < \quad V_{a_screw2} = 302\,lb$

$\text{if}(V_{max_heavy2} < V_{a_screw2}, \text{" O.K. "}, \text{" N.G. "}) = \text{" O.K. "}$

Tension in Screws at Light Panels in Typical Wind Zones

$$T_{max_tz_light} := \frac{P_{clip_WL_tz}}{2} + \frac{P_{clip_DL_light} \cdot 3.75in}{3in} = 80\,lb \quad < \quad T_{a_screw2} = 131\,lb$$

$$if(T_{max_tz_light} < T_{a_screw2}, "\ O.K.\ ", "\ N.G.\ ") = "\ O.K.\ "$$

Tension in Screws at Light Panels in Corner Wind Zones

$$T_{max_cz_light} := \frac{P_{clip_WL_cz}}{2} + \frac{P_{clip_DL_light} \cdot 3.75in}{3in} = 120\,lb \quad < \quad T_{a_screw2} = 131\,lb$$

$$if(T_{max_cz_light} < T_{a_screw2}, "\ O.K.\ ", "\ N.G.\ ") = "\ O.K.\ "$$

Tension in Screws at Heavy Panels in Typical Wind Zones

$$T_{max_tz_heavy} := \frac{P_{clip_WL_tz}}{2} + \frac{P_{clip_DL_heavy} \cdot 3.75in}{3in} = 98\,lb \quad < \quad T_{a_screw2} = 131\,lb$$

$$if(T_{max_tz_heavy} < T_{a_screw2}, "\ O.K.\ ", "\ N.G.\ ") = "\ O.K.\ "$$

Tension in Screws at Heavy Panels in Corner Wind Zones

$$T_{max_cz_heavy} := \frac{P_{clip_WL_cz}}{2} + \frac{P_{clip_DL_heavy} \cdot 3.75in}{3in} = 138\,lb \quad > \quad T_{a_screw2} = 131\,lb$$

$$if(T_{max_cz_heavy} < T_{a_screw2}, "\ O.K.\ ", "\ N.G.\ ") = "\ N.G.\ "$$

only 5.3% over, say "O.K."

Check Compression Stress in Thermal Block Material

$$T_{max} := max(T_{max_tz_light}, T_{max_cz_light}, T_{max_tz_heavy}, T_{max_cz_heavy}) = 138\,lb$$

$$C_{max} := T_{max} = 138\,lb$$

$F_{c_25} := 9840psi$ Compressive strength of block material (25% Glass Fill)

$F_{c_40} := 13600psi$ Compressive strength of block material (40% Glass Fill)

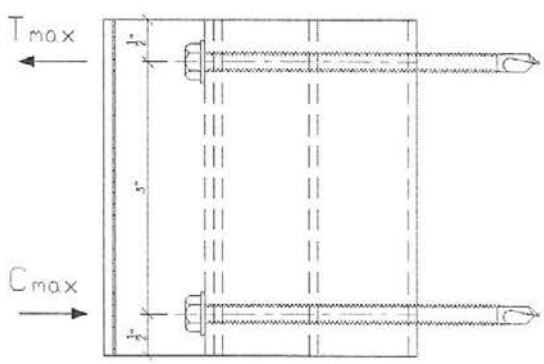

Consider all compressive to act at bottom 1" of block.

$t_{block_wall} := 0.0984in$

$f_c := \frac{C_{max}}{4 \cdot 1in \cdot 0.0984in} = 352 \cdot psi$ <<< $F_{c_25} = 9840 \cdot psi$

Compression stress in block material is much less than than the material compressive strength. Block material is adequate for imposed compressive force.

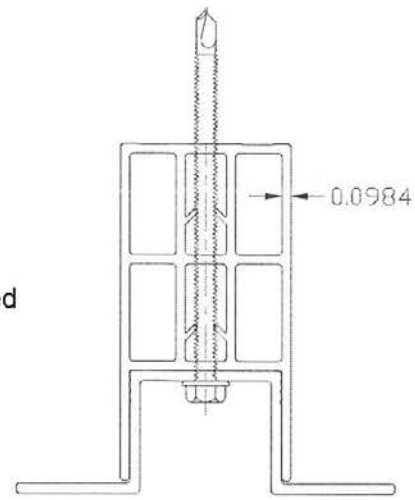

Check 0.100" 6063-T6 Aluminum Clip (Fy=25 ksi min., Fu=30 ksi min.)

$t_{alum} = 0.1000 \cdot in$ (Aluminum Thickness)

$L_{alum} := 4in$ (Aluminum Length)

$F_{y_alum} = 25 \cdot ksi$ (Minimum Yield Strength of Aluminum)

$F_{u_alum} = 30 \cdot ksi$ (Minimum Ultimate Strength of Aluminum)

$F_{su_alum} := 19ksi$ (Minimum Ultimate Shear Strength of Aluminum)

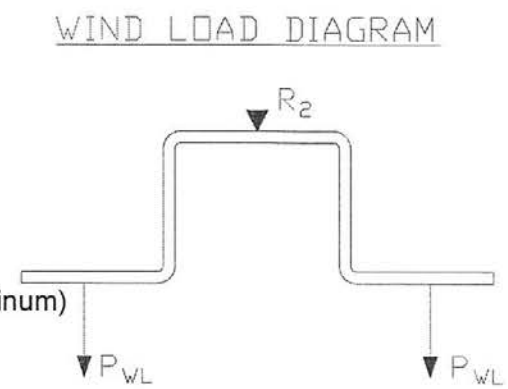

Wind Load at Screw Locations

$$P_{WL} := \max\left(\frac{P_{clip_WL_tz}}{2}, \frac{P_{clip_WL_cz}}{2}\right) = 100\,lb$$

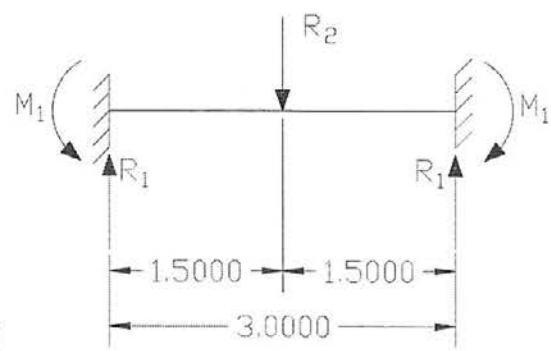

Wind Load Reaction at R2 Location

$$R_{2_WL} := 2 \cdot P_{WL} = 200\,lb$$

Weak Axis Moment / Stress at R2 Location From Wind Load

$$M_{max_wa_R2} := \frac{R_{2_WL} \cdot 3in}{8} = 75 \cdot in \cdot lb$$

$$f_{b_wa_R2} := \frac{M_{max_wa_R2}}{\frac{1}{6}\cdot L_{alum}\cdot t_{alum}^{2}} = 11250\cdot psi$$

$$F_{b_wa_alum} := 19700\cdot psi$$

$$f_{b_wa_R2} = 11250\cdot psi \quad < \quad F_{b_wa_alum} = 19700\cdot psi$$

$$if\left(f_{b_wa_R2} < F_{b_wa_alum}, \text{" O.K. "}, \text{" N.G. "}\right) = \text{" O.K. "}$$

Dead Load at Screw Locations

$$P_{DL} := \max\left(\frac{P_{clip_DL_light}}{2}, \frac{P_{clip_DL_heavy}}{2}\right) = 15\,lb$$

Dead Load Reaction at R_2 Location

$$R_{2_DL} := 2\cdot P_{DL} = 31\,lb$$

Strong Axis Moment / Stress at R_2 Location

$$M_{max_sa_DL} := \frac{R_{2_DL}\cdot 3in}{4} = 23\cdot in\cdot lb$$

$$f_{b_sa_DL} := \frac{M_{max_sa_DL}}{\frac{1}{6}\cdot t_{alum}\cdot L_{alum}^{2}} = 87\cdot psi$$

$$S_{b_limit} := \frac{L_{alum}}{t_{alum}}\cdot\sqrt{\left(\frac{1.5in}{1.0\cdot L_{alum}}\right)} = 24$$

$$F_{b_sa_alum} := 27.9ksi - 0.532ksi\cdot\left(S_{b_limit}\right) = 14869\cdot psi$$

$$f_{b_sa_DL} = 87\cdot psi \quad < \quad F_{b_sa_alum} = 14869\cdot psi$$

$$if\left(f_{b_sa_DL} < F_{b_sa_alum}, \text{" O.K. "}, \text{" N.G. "}\right) = \text{" O.K. "}$$

DEAD LOAD DIAGRAM

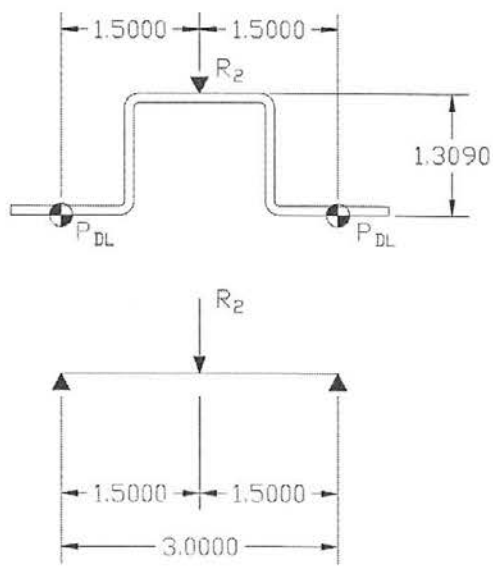

Torsional Moment / Stress at R2 Location

$$M_{max_v\tau_R2} := P_{DL} \cdot 1.3090in = 20 \cdot in \cdot lb$$

$$f_{v\tau_R2} := \frac{M_{max_v\tau_R2} \cdot t_{alum}}{\frac{1}{3} \cdot L_{alum} \cdot t_{alum}^{3}} = 1512 \cdot psi$$

$$S_{v\tau_limit} := \frac{L_{alum}}{t_{alum}} = 40$$

$$F_{v\tau_alum} := 11.5ksi - 0.062ksi \cdot \left(S_{v\tau_limit}\right) = 9020 \cdot psi$$

$$f_{v\tau_R2} = 1512 \cdot psi \quad < \quad F_{v\tau_alum} = 9020 \cdot psi$$

$$if\left(f_{v\tau_R2} < F_{v\tau_alum}, \text{" O.K. "}, \text{" N.G. "}\right) = \text{" O.K. "}$$

Combined Stress Ratio

$$CSR_{alum} := \left(\frac{f_{b_wa_R2}}{F_{b_wa_alum}} + \frac{f_{b_sa_DL}}{F_{b_sa_alum}}\right)^2 + \left(\frac{f_{v\tau_R2}}{F_{v\tau_alum}}\right)^2 = 0.361 \quad < \quad 1.000$$

$$if\left(CSR_{alum} < 1.000, \text{" O.K. "}, \text{" N.G. "}\right) = \text{" O.K. "}$$

THERMAL CLIP ANALYSIS

(ATTACHED TO 16 GAUGE COLD FORMED METAL STUDS)

Thermal Clip Analysis: Attached to 16 Gauge Cold Formed Metal Studs

Basis of Design Information

$S_{studs} := 16in$ (Typical Wall Construction - On Center Stud Spacing)

$S_{t_clip} := 36in$ (Thermal Clip Spacing Along Vertical Studs - Basis of Design Clip Spacing)

$A := S_{studs} \cdot S_{t_clip} = 4\,ft^2$ (Panel Area Per Thermal Clip - Basis of Design)

$WL_{tz} := 30 \cdot psf$ (Basis of Design Wind Pressure - Typical Wind Zone of Building)

$WL_{cz} := 50 \cdot psf$ (Basis of Design Wind Pressure - Corner Wind Zone of Building)

$DL_{pnl_light} := 2.0 \cdot psf$ (Basis of Design "Light" Panel Weight - 1/8" Solid Aluminum or 4mm ACM)

$DL_{pnl_heavy} := 5.7 \cdot psf$ (Basis of Design "Heavy" Panel Weight - 1/2" TATKL)

$DL_{misc} := 2.0 \cdot psf$ (Basis of Design Miscellanleous Materials - Extrusions / Z-Girts of Panel System)

Basis of Design Load Determination

Wind Load Reaction Per Thermal Clip

$P_{clip_WL_tz} := A \cdot WL_{tz} = 120\,lb$ (Wind Load Reaction at Clips in Typical Zone Wind Region)

$P_{clip_WL_cz} := A \cdot WL_{cz} = 200\,lb$ (Wind Load Reaction at Clips in Corner Zone Wind Region)

Dead Load Reaction Per Thermal Clip

$P_{clip_DL_light} := A \cdot (DL_{pnl_light} + DL_{misc}) = 16\,lb$ (Dead Load Reaction - Light Panels)

$P_{clip_DL_heavy} := A \cdot (DL_{pnl_heavy} + DL_{misc}) = 31\,lb$ (Dead Load Reaction - Heavy Panels)

Check 1/4-14 Dril-Flex into 0.100" 6063-T6 Aluminum Material (Fy=25 ksi min., Fu=30 ksi min.)

$d_1 := 0.25in$ (Screw Diameter)

$t_{alum} := 0.100in$ (Aluminum Thickness)

$F_{y_alum} := 25 \cdot ksi$ (Minimum Yield Strength of Aluminum)

$F_{u_alum} := 30 \cdot ksi$ (Minimum Ultimate Strength of Aluminum)

Allowable Shear / Bearing Capacity of Screws

$V_{a_screw_AAMA} := 621 \cdot lb$ (Screw Shear Strength Per AAMA TIR-A9-14)

$V_{a_screw_ESR3332} := \frac{2692 \cdot lb}{3} = 897\ lb$ (Screw Shear Strength Per ESR-3332)

$V_{a_screw_ADM} := \frac{2d_1 \cdot t_{alum} \cdot F_{u_alum}}{3} = 500\ lb$ (Screw Shear Bearing Strength Per Aluminum Design Manual 2010 Edition)

$V_{a_screw} := \min(V_{a_screw_AAMA}, V_{a_screw_ESR3332}, V_{a_screw_ADM}) = 500\ lb$

Allowable Tensile / Pull-Out Capacity of Screws

$T_{a_screw_AAMA} := 1075 \cdot lb$ (Screw Tensile Strength Per AAMA TIR-A9-14)

$T_{a_screw_ESR3332} := \frac{4363 \cdot lb}{3} = 1454\ lb$ (Screw Tensile Strength Per ESR-3332)

$T_{a_screw_pullout_AAMA} := 236 \cdot lb$ (Screw Pullout Strength Per AAMA TIR-A9-14)

$T_{a_screw} := \min(T_{a_screw_AAMA}, T_{a_screw_ESR3332}, T_{a_screw_pullout_AAMA}) = 236\ lb$

Check (2) Screws at Each Panel Connection to Thermal Clip

Shear in Screws at Light Panels

$V_{max_light} := \frac{P_{clip_DL_light}}{2} = 8\ lb \quad < \quad V_{a_screw} = 500\ lb$

$if(V_{max_light} < V_{a_screw}, "O.K.", "N.G.") = "O.K."$

Shear in Screws at Heavy Panels

$V_{max_heavy} := \frac{P_{clip_DL_heavy}}{2} = 15\ lb \quad < \quad V_{a_screw} = 500\ lb$

$if(V_{max_heavy} < V_{a_screw}, "O.K.", "N.G.") = "O.K."$

Tension in Screws at Panels in Typical Wind Zones

$T_{max_tz} := \frac{P_{clip_WL_tz}}{2} = 60\ lb \quad < \quad T_{a_screw} = 236\ lb$

$if(T_{max_tz} < T_{a_screw}, "O.K.", "N.G.") = "O.K."$

Tension in Screws at Panels in Corner Wind Zones

$T_{max_cz} := \frac{P_{clip_WL_cz}}{2} = 100\,lb$ < $T_{a_screw} = 236\,lb$

$if(T_{max_cz} < T_{a_screw}, "O.K.", "N.G.") = "O.K."$

Check 1/4-14 Dril-Flex into 16 ga. Metal Stud Framing (Fy=33 ksi min., Fu=45 ksi min.)

$d_2 := 0.25in$ (Screw Diameter)

$t_{stud} := 0.060in$ (Metal Stud Thickness)

$t_{stud_SSMA} := 0.0566in$ (SSMA Metal Stud Thickness)

$F_{y_stud} := 33 \cdot ksi$ (Minimum Yield Strength of Metal Studs)

$F_{u_stud} := 45 \cdot ksi$ (Minimum Ultimate Strength of Metal Studs)

Allowable Shear / Bearing Capacity of Screws

$V_{a_screw2_AAMA} := 621 \cdot lb$ (Screw Shear Strength Per AAMA TIR-A9-14)

$V_{a_screw2_ESR3332} := \frac{2692 \cdot lb}{3} = 897\,lb$ (Screw Shear Strength Per ESR-3332)

$V_{a_screw2_ESR3332_brg} := 520 \cdot lb$ (Screw Shear Bearing Strength Per ESR-3332)

$V_{a_screw2_DF} := \frac{1681 \cdot lb}{3} = 560\,lb$ (Screw Shear Bearing Strength Per Dril-Flex)

$V_{a_screw2_AISI} := \frac{4.2\sqrt{t_{stud}^3 \cdot d_2 \cdot F_{u_stud}}}{3} = 463\,lb$ (Screw Shear Bearing Strength Per AISI Cold Formed Steel Design 2008 Edition)

$V_{a_screw2_SSMA} := \frac{4.2\sqrt{t_{stud_SSMA}^3 \cdot d_2 \cdot F_{u_stud}}}{3} = 424\,lb$ (Screw Shear Bearing Strength Per AISI Cold Formed Steel Design 2008 Edition-SSMA)

$V_{a_screw2_shear} := \min(V_{a_screw2_AAMA}, V_{a_screw2_ESR3332}) = 621\,lb$

$V_{a_screw2_bearing} := \min(V_{a_screw2_ESR3332_brg}, V_{a_screw2_DF}, V_{a_screw2_AISI}, V_{a_screw2_SSMA}) = 424\,lb$

$V_{a_screw2} := \min(V_{a_screw2_shear}, V_{a_screw2_bearing}) = 424\,lb$

Allowable Tensile / Pull-Out Capacity of Screws

$T_{a_screw2_AAMA} := 1075 \cdot lb$ (Screw Tensile Strength Per AAMA TIR-A9-14)

$T_{a_screw2_ESR3332} := \frac{4363 \cdot lb}{3} = 1454\,lb$ (Screw Tensile Strength Per ESR-3332)

$T_{a_screw2_ESR3332_po} := 207lb = 207\,lb$ (Screw Tensile Pull-Out Strength Per ESR-3332)

$T_{a_screw2_DF} := \frac{530 \cdot lb}{3} = 177\,lb$ (Screw Tensile Pull-Out Strength Per Dril-Flex)

$T_{a_screw2_AISI} := \frac{0.85 t_{stud} \cdot d_2 \cdot F_{u_stud}}{3} = 191\,lb$ (Screw Tensile Pull-Out Strength Per AISI Cold Formed Steel Design 2008 Edition)

$T_{a_screw2_SSMA} := \frac{0.85 t_{stud_SSMA} \cdot d_2 \cdot F_{u_stud}}{3} = 180\,lb$ (Screw Tensile Pull-Out Strength Per AISI Cold Formed Steel Design 2008 Edition-SSMA)

$T_{a_screw2_tension} := \min(T_{a_screw2_AAMA}, T_{a_screw2_ESR3332}) = 1075\,lb$

$T_{a_screw2_pullout} := \min(T_{a_screw2_ESR3332_po}, T_{a_screw2_DF}, T_{a_screw2_AISI}, T_{a_screw2_SSMA}) = 177\,lb$

$T_{a_screw2} := \min(T_{a_screw2_tension}, T_{a_screw2_pullout}) = 177\,lb$

Check (2) Screws at Each Thermal Clip Connection to Metal Stud Wall

Shear in Screws at Light Panels

$V_{max_light2} := \frac{P_{clip_DL_light}}{2} = 8\,lb \quad < \quad V_{a_screw2} = 424\,lb$

$\text{if}(V_{max_light2} < V_{a_screw2}, \text{" O.K. "}, \text{" N.G. "}) = \text{" O.K. "}$

Shear in Screws at Heavy Panels

$V_{max_heavy2} := \frac{P_{clip_DL_heavy}}{2} = 15\,lb \quad < \quad V_{a_screw2} = 424\,lb$

$\text{if}(V_{max_heavy2} < V_{a_screw2}, \text{" O.K. "}, \text{" N.G. "}) = \text{" O.K. "}$

Tension in Screws at Light Panels in Typical Wind Zones

$$T_{max_tz_light} := \frac{P_{clip_WL_tz}}{2} + \frac{P_{clip_DL_light} \cdot 3.75in}{3in} = 80\,lb \quad < \quad T_{a_screw2} = 177\,lb$$

$$if(T_{max_tz_light} < T_{a_screw2}, "\ O.K.\ ", "\ N.G.\ ") = "\ O.K.\ "$$

Tension in Screws at Light Panels in Corner Wind Zones

$$T_{max_cz_light} := \frac{P_{clip_WL_cz}}{2} + \frac{P_{clip_DL_light} \cdot 3.75in}{3in} = 120\,lb \quad < \quad T_{a_screw2} = 177\,lb$$

$$if(T_{max_cz_light} < T_{a_screw2}, "\ O.K.\ ", "\ N.G.\ ") = "\ O.K.\ "$$

Tension in Screws at Heavy Panels in Typical Wind Zones

$$T_{max_tz_heavy} := \frac{P_{clip_WL_tz}}{2} + \frac{P_{clip_DL_heavy} \cdot 3.75in}{3in} = 98\,lb \quad < \quad T_{a_screw2} = 177\,lb$$

$$if(T_{max_tz_heavy} < T_{a_screw2}, "\ O.K.\ ", "\ N.G.\ ") = "\ O.K.\ "$$

Tension in Screws at Heavy Panels in Corner Wind Zones

$$T_{max_cz_heavy} := \frac{P_{clip_WL_cz}}{2} + \frac{P_{clip_DL_heavy} \cdot 3.75in}{3in} = 138\,lb \quad > \quad T_{a_screw2} = 177\,lb$$

$$if(T_{max_cz_heavy} < T_{a_screw2}, "\ O.K.\ ", "\ N.G.\ ") = "\ O.K.\ "$$

Check Compression Stress in Thermal Block Material

$$T_{max} := max(T_{max_tz_light}, T_{max_cz_light}, T_{max_tz_heavy}, T_{max_cz_heavy}) = 138\,lb$$

$$C_{max} := T_{max} = 138\,lb$$

$F_{c_25} := 9840psi$ Compressive strength of block material (25% Glass Fill)

$F_{c_40} := 13600psi$ Compressive strength of block material (40% Glass Fill)

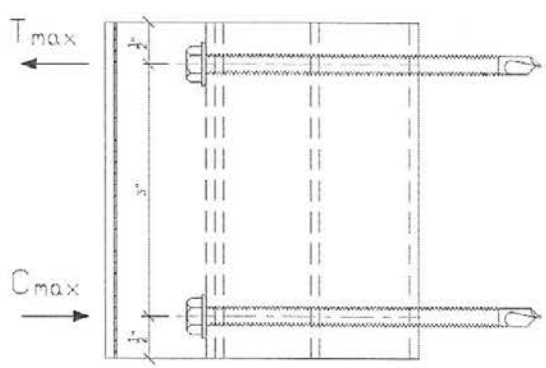

Consider all compressive to act at bottom 1" of block.

$t_{block_wall} := 0.0984in$

$$f_c := \frac{C_{max}}{4 \cdot 1in \cdot 0.0984in} = 352 \cdot psi \quad <<< \quad F_{c_25} = 9840 \cdot psi$$

Compression stress in block material is much less than than the material compressive strength. Block material is adequate for imposed compressive force.

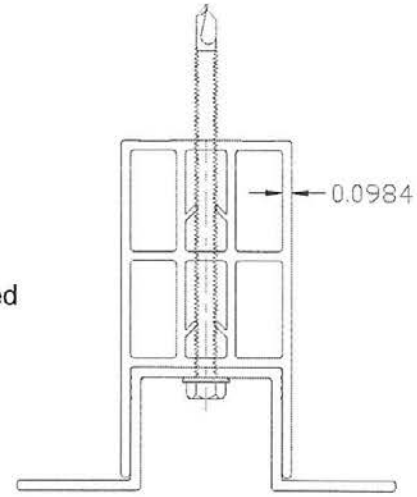

Check 0.100" 6063-T6 Aluminum Clip (Fy=25 ksi min., Fu=30 ksi min.)

$t_{alum} = 0.1000 \cdot in$ (Aluminum Thickness)

$L_{alum} := 4in$ (Aluminum Length)

$F_{y_alum} = 25 \cdot ksi$ (Minimum Yield Strength of Aluminum)

$F_{u_alum} = 30 \cdot ksi$ (Minimum Ultimate Strength of Aluminum)

$F_{su_alum} := 19ksi$ (Minimum Ultimate Shear Strength of Aluminum)

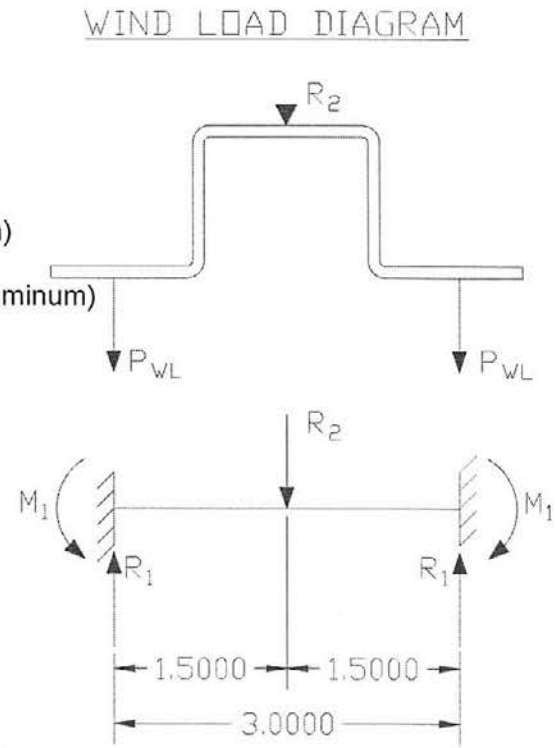

Wind Load at Screw Locations

$$P_{WL} := \max\left(\frac{P_{clip_WL_tz}}{2}, \frac{P_{clip_WL_cz}}{2}\right) = 100\,lb$$

Wind Load Reaction at R2 Location

$$R_{2_WL} := 2 \cdot P_{WL} = 200\,lb$$

Weak Axis Moment / Stress at R2 Location From Wind Load

$$M_{max_wa_R2} := \frac{R_{2_WL} \cdot 3in}{8} = 75 \cdot in \cdot lb$$

$$f_{b_wa_R2} := \frac{M_{max_wa_R2}}{\frac{1}{6} \cdot L_{alum} \cdot t_{alum}^2} = 11250 \cdot psi$$

$$F_{b_wa_alum} := 19700 \cdot psi$$

$$f_{b_wa_R2} = 11250 \cdot psi \quad < \quad F_{b_wa_alum} = 19700 \cdot psi$$

$$if(f_{b_wa_R2} < F_{b_wa_alum}, "O.K.", "N.G.") = "O.K."$$

Dead Load at Screw Locations

$$P_{DL} := \max\left(\frac{P_{clip_DL_light}}{2}, \frac{P_{clip_DL_heavy}}{2}\right) = 15\,lb$$

Dead Load Reaction at R_2 Location

$$R_{2_DL} := 2 \cdot P_{DL} = 31\,lb$$

Strong Axis Moment / Stress at R_2 Location

$$M_{max_sa_DL} := \frac{R_{2_DL} \cdot 3in}{4} = 23 \cdot in \cdot lb$$

$$f_{b_sa_DL} := \frac{M_{max_sa_DL}}{\frac{1}{6} \cdot t_{alum} \cdot L_{alum}^2} = 87 \cdot psi$$

$$S_{b_limit} := \frac{L_{alum}}{t_{alum}} \cdot \sqrt{\left(\frac{1.5in}{1.0 \cdot L_{alum}}\right)} = 24$$

$$F_{b_sa_alum} := 27.9ksi - 0.532ksi \cdot (S_{b_limit}) = 14869 \cdot psi$$

$$f_{b_sa_DL} = 87 \cdot psi \quad < \quad F_{b_sa_alum} = 14869 \cdot psi$$

$$if(f_{b_sa_DL} < F_{b_sa_alum}, "O.K.", "N.G.") = "O.K."$$

DEAD LOAD DIAGRAM

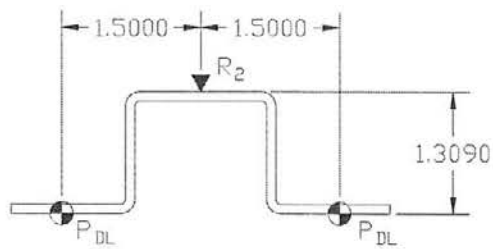

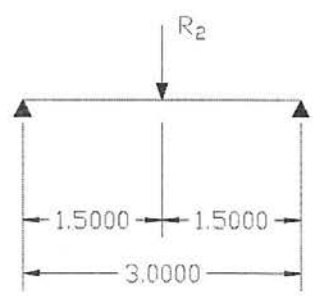

Torsional Moment / Stress at R_2 Location

$$M_{max_v\tau_R2} := P_{DL} \cdot 1.3090in = 20 \cdot in \cdot lb$$

$$f_{v\tau_R2} := \frac{M_{max_v\tau_R2} \cdot t_{alum}}{\frac{1}{3} \cdot L_{alum} \cdot t_{alum}^{3}} = 1512 \cdot psi$$

$$S_{v\tau_limit} := \frac{L_{alum}}{t_{alum}} = 40$$

$$F_{v\tau_alum} := 11.5ksi - 0.062ksi \cdot (S_{v\tau_limit}) = 9020 \cdot psi$$

$$f_{v\tau_R2} = 1512 \cdot psi \quad < \quad F_{v\tau_alum} = 9020 \cdot psi$$

$$if(f_{v\tau_R2} < F_{v\tau_alum}, "O.K.", "N.G.") = "O.K."$$

Combined Stress Ratio

$$CSR_{alum} := \left(\frac{f_{b_wa_R2}}{F_{b_wa_alum}} + \frac{f_{b_sa_DL}}{F_{b_sa_alum}}\right)^2 + \left(\frac{f_{v\tau_R2}}{F_{v\tau_alum}}\right)^2 = 0.361 \quad < \quad 1.000$$

$$if(CSR_{alum} < 1.000, "O.K.", "N.G.") = "O.K."$$

THERMAL CLIP ANALYSIS

(ATTACHED TO WOOD STUDS)

Thermal Clip Attachment Anlaysis: Attached to Wood Stud Wall

WOOD SCREWS COMBINED LATERAL & WITHDRAW LOADS W/ ALUMINUM SIDE MEMBER

(Ref. National Design Standard (NDS 2012 Edition) for Wood Construction)

#14 WOOD SCREW WITH ALUMINUM SIDE MEMBER

$R_w := 138lb$ (Applied withdrawal load - See calculations for clips attached to cold formed metal studs)

$R_z := 15lb$ (Applied shear load - See calculations for clips attached to cold formed metal studs)

Appendix L - Table L3 Standard Wood Screws & Associated Bending Yield Strength

	Wood Screw Number										
	6	7	8	9	10	12	14	16	18	20	24
Nominal D (in)	0.138	0.151	0.164	0.177	0.19	0.216	0.242	0.268	0.294	0.32	0.372
Root D_r (in)	0.113	0.122	0.131	0.142	0.152	0.171	0.196	0.209	0.232	0.255	0.298
F_{yb} (psi)	100000	90000	90000	90000	80000	80000	70000	70000	70000	70000	70000

$D := 0.242in$ Wood Screw Nominal Diameter

$D_r := 0.196in$ Wood Screw Root Diameter

$F_{yb} := 70000psi$ Dowel Bending Yield Strength, psi (See 11.3.6) - Based on Nominal Diameter - Table 11M, Note 2

$p := 6 \cdot D = 1.452 \cdot in$ Length of Fastener Penetration into the Wood Member - Min = 6D

$E := 2 \cdot D = 0.484 \cdot in$ Length of tapered tip of screw, in. (See 11.3.5)

$l_m := p - \frac{E}{2} = 1.210 \cdot in$ Main member dowel bearing length, in. (See 11.3.5)

$l_s := 0.100in$ Side member dowel bearing length, in. (See 11.3.5)

Note: "l_m" or "l_s" **shall not exceed** the length of fastener penetration "**p**", into the wood member (11.3.5.2).

$G_m := 0.42$ Main member specific gravity (See Table 11.3.3A)

Resultant applied load: $R_r := \sqrt{R_w^2 + R_z^2} = 138.8lb$

Angle of insertion: $\alpha := atan\left(\frac{R_w}{R_z}\right) = 1.463$

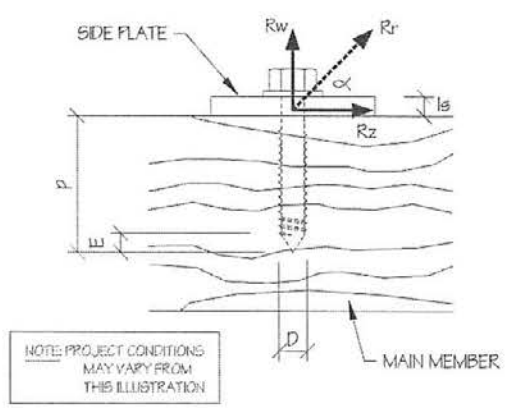

Dowel Bearing Strength (See Table 11.3.3)

Main member: $F_{em} := 3350psi$

Side member: $F_{es} := 31000psi$ Allowable bearing of aluminum: 6063 – T6

Reduction Terms (Table 11.3.1B)

$\theta := 90$ Maximum angle of load to grain ($0 \le q \le 90$) for any member in connection.

$K_\theta := 1 + 0.25\left(\frac{\theta}{90}\right)$ $K_\theta = 1.250$

$K_{D1} := \text{if}\left(D_r \le 0.17in, 2.2in, 10D_r + 0.5in\right)$

$K_D := \text{if}\left(D_r < 0.25in, K_{D1}, 0\right)$ $K_D = 2.5 \cdot in$

For threaded fasteners where nominal diameter (see Appendix L) is greater than or equal to 0.25" and the root diameter is less than 0.25", $R_d = K_D K_\theta$.

Is the above condition true (yes/no)? Ans1 := no yes ≡ 1 no ≡ 0

$R_{d1} := \frac{\left(\text{if}\left(Ans1 = 1, K_D \cdot K_\theta, 0\right)\right)}{in}$ $R_{d1} = 0.0$

$R_{dI1} := \frac{\left(\text{if}\left(D_r < 0.25in, K_D, \text{if}\left(D_r \le 1in, 4 \cdot K_\theta \cdot in, 0\right)\right)\right)}{in}$ $R_{dI1} = 2.5$

$R_{dI} := \text{if}\left(Ans1 = 1, R_{d1}, R_{dI1}\right)$ $R_{dI} = 2.5$ Yield mode: I_m & I_s

$R_{dII1} := \frac{\left[\text{if}\left[D_r < 0.25in, K_D, \text{if}\left[D_r \le 1in, \left(3.6 \cdot K_\theta\right) \cdot in, 0\right]\right]\right]}{in}$ $R_{dII1} = 2.5$

$R_{dII} := \text{if}\left(Ans1 = 1, R_{d1}, R_{dII1}\right)$ $R_{dII} = 2.5$ Yield mode: II

$R_{dIII1} := \frac{\left[\text{if}\left[D_r < 0.25in, K_D, \text{if}\left[D_r \le 1in, \left(3.2 \cdot K_\theta\right) in, 0\right]\right]\right]}{in}$ $R_{dIII1} = 2.5$

$R_{dIII} := \text{if}\left(Ans1 = 1, R_{d1}, R_{dIII1}\right)$ $R_{dIII} = 2.5$ Yield mode: III_m, III_s & IV

Notes for Table 11.3.1A - Yield Limit Equations

$$R_e := \frac{F_{em}}{F_{es}} \qquad R_e = 0.108$$

$$R_t := \frac{l_m}{l_s} \qquad R_t = 12.100$$

$$k_1 := \frac{\sqrt{R_e + 2 \cdot R_e^2 \cdot \left(1 + R_t + R_t^2\right) + R_t^2 \cdot R_e^3} - R_e \cdot \left(1 + R_t\right)}{1 + R_e} \qquad k_1 = 0.531$$

$$k_2 := -1 + \sqrt{2 \cdot \left(1 + R_e\right) + \frac{2 \cdot F_{yb} \cdot \left(1 + 2 \cdot R_e\right) \cdot D_r^2}{3 \cdot F_{em} \cdot l_m^2}} \qquad k_2 = 0.631$$

$$k_3 := -1 + \sqrt{\frac{2 \cdot \left(1 + R_e\right)}{R_e} + \frac{2 \cdot F_{yb} \cdot \left(2 + R_e\right) \cdot D_r^2}{3 \cdot F_{em} \cdot l_s^2}} \qquad k_3 = 10.546$$

Table 11.3.1A - Yield Limit Equations

Yield Mode	Single Shear	
I_m	$Z_{Im} := \frac{D_r \cdot l_m \cdot F_{em}}{R_{dI}}$	$Z_{Im} = 323 \cdot lb$
I_s	$Z_{Is} := \frac{D_r \cdot l_s \cdot F_{es}}{R_{dII}}$	$Z_{Is} = 247\ lb$
II	$Z_{II} := \frac{k_1 \cdot D_r \cdot l_s \cdot F_{es}}{R_{dII}}$	$Z_{II} = 131\ lb$
III_m	$Z_{IIIm} := \frac{k_2 \cdot D_r \cdot l_m \cdot F_{em}}{\left(1 + 2 \cdot R_e\right) \cdot R_{dIII}}$	$Z_{IIIm} = 168\ lb$
III_s	$Z_{IIIs} := \frac{k_3 \cdot D_r \cdot l_s \cdot F_{em}}{\left(2 + R_e\right) \cdot R_{dIII}}$	$Z_{IIIs} = 134\ lb$
IV	$Z_{IV} := \frac{D_r^2}{R_{dIII}} \cdot \sqrt{\frac{2 \cdot F_{em} \cdot F_{yb}}{3 \cdot \left(1 + R_e\right)}}$	$Z_{IV} = 185\ lb$

$Z_a := \begin{pmatrix} Z_{Im} \\ Z_{IIIm} \\ Z_{IIIs} \end{pmatrix}$ $\quad Z_a = \begin{pmatrix} 323 \\ 168 \\ 134 \end{pmatrix} \cdot lb$ $\quad Zmin_a := min(Z_a)$ $\quad Zmin_a = 134 \cdot lb$ Wood strength limit

$Z_b := \begin{pmatrix} Z_{Is} \\ Z_{II} \\ Z_{IV} \end{pmatrix}$ $\quad Z_b = \begin{pmatrix} 247 \\ 131 \\ 185 \end{pmatrix} \cdot lb$ $\quad Zmin_b := min(Z_b)$ $\quad Zmin_b = 131 \cdot lb$ Metal strength limit

$Zmin := min(Zmin_a, Zmin_b) = 131 \cdot lb$ $\quad$ controling_part := if$(Zmin_a > Zmin_b$, "Metal", "Wood"$)$

Yield Limits: controling_part = "Metal"

Adjustment Factors for Dowel-type Fasteners Lateral Loads (Table 10.3.1)

note: C_{D_L} - Load duration factor can be taken as 1.6 except when connection capacity is based on design of metal parts such as; metal plates, hangers, fasteners and others. (Appendix B.3 and Section 10.2.3)

$C_{D_L} := if(Zmin_a > Zmin_b, 1.0, 1.6) = 1.0$ Load Duration Factor (Section 10.3.2, Table 10.3.3)

$C_{M_L} := 1.0$ Wet Service Factor (Section 10.3.3, Table 10.3.3)

$C_{t_L} := 1.0$ Temperauture Factor (Section 10.3.4, Table 10.3.4)

$C_{g_L} := 1.0$ Group Action Factor (Section 10.3.6)

$C_{\Delta_L} := 1.0$ Geometry Factor (Section 11.5.1)

$C_{eg_L} := 1.0$ End Grain Factor (Section 11.5.2)

$C_{di_L} := 1.0$ Diaphragm Action Factor (Section 11.5.3)

$C_{tn_L} := 1.0$ Toe-Nail Factor (Section 11.5.4)

Adjusted Design Shear Value

$Z_{adjusted} := Zmin \cdot C_{D_L} \cdot C_{M_L} \cdot C_{t_L} \cdot C_{g_L} \cdot C_{\Delta_L} \cdot C_{eg_L} \cdot C_{di_L} \cdot C_{tn_L}$

$Z_{adjusted} = 131\ lb$ (Allowable lateral load)

Wood Screw Withdraw Design Values (Section 11.2.2)

$W := 2850 \cdot G_m^{\ 2} \cdot D \cdot psi = 122 \cdot \frac{lb}{in}$ (Equation 11.2-4)

$W_p := W \cdot p = 177\ lb$ (Section 11.2.3.4)

Adjustment Factors for Dowel-type Fasteners Withdraw Loads (Table 10.3.1)

$C_{D_W} := 1.0$ Load Duration Factor (section 10.3.2)

$C_{M_W} := 1.0$ Wet Service Factor (section 10.3.3)

$C_{t_W} := 1.0$ Temperauture Factor (section 10.3.4)

$C_{eg_W} := 1.0$ End Grain Factor (section 11.5.2)

$C_{tn_W} := 1.0$ Toe-Nail Factor (section 11.5.4)

Adjusted Design Withdraw Value

$$W_{adjusted} := W_p \cdot C_{D_W} \cdot C_{M_W} \cdot C_{t_W} \cdot C_{eg_W} \cdot C_{tn_W}$$

$W_{adjusted} = 177\ lb$ (Allowable withdraw load)

Allowable Resultant Load - Combined Lateral & Withdrawl Loading (Section 11.4.1)

$$Z_\alpha := \frac{W_{adjusted} \cdot Z_{adjusted}}{W_{adjusted} \cdot \cos(\alpha)^2 + Z_{adjusted} \cdot \sin(\alpha)^2} = 176\ lb \quad > \quad R_r = 139\ lb \qquad \text{(Equation 11.4-1)}$$

$$wood_screw := if\left(Z_\alpha > R_r, \text{"ok"}, \text{"ng"}\right) \qquad wood_screw = \text{"ok"}$$

THERMAL CLIP ANALYSIS

(ATTACHED TO CONCRETE WALL)

Thermal Clip Analysis: Attached to 6" thick 3000 psi NW Concrete Wall

Basis of Design Information

$S_{horiz} := 16in$ (Horizontal Spacing of Thermal Clips - Basis of Design Clip Spacing)

$S_{t_clip} := 36in$ (Vertical Spacing of Thermal Clips - Basis of Design Clip Spacing)

$A := S_{horiz} \cdot S_{t_clip} = 4\,ft^2$ (Panel Area Per Thermal Clip - Basis of Design)

$WL_{tz} := 30 \cdot psf$ (Basis of Design Wind Pressure - Typical Wind Zone of Building)

$WL_{cz} := 50 \cdot psf$ (Basis of Design Wind Pressure - Corner Wind Zone of Building)

$DL_{pnl_light} := 2.0 \cdot psf$ (Basis of Design "Light" Panel Weight - 1/8" Solid Aluminum or 4mm ACM)

$DL_{pnl_heavy} := 5.7 \cdot psf$ (Basis of Design "Heavy" Panel Weight - 1/2" TATKL)

$DL_{misc} := 2.0 \cdot psf$ (Basis of Design Miscellanleous Materials - Extrusions / Z-Girts of Panel System)

Basis of Design Load Determination

Wind Load Reaction Per Thermal Clip

$P_{clip_WL_tz} := A \cdot WL_{tz} = 120\,lb$ (Wind Load Reaction at Clips in Typical Zone Wind Region)

$P_{clip_WL_cz} := A \cdot WL_{cz} = 200\,lb$ (Wind Load Reaction at Clips in Corner Zone Wind Region)

Dead Load Reaction Per Thermal Clip

$P_{clip_DL_light} := A \cdot (DL_{pnl_light} + DL_{misc}) = 16\,lb$ (Dead Load Reaction - Light Panels)

$P_{clip_DL_heavy} := A \cdot (DL_{pnl_heavy} + DL_{misc}) = 31\,lb$ (Dead Load Reaction - Heavy Panels)

Check 1/4-14 Dril-Flex into 0.100" 6063-T6 Aluminum Material (Fy=25 ksi min., Fu=30 ksi min.)

$d_1 := 0.25in$ (Screw Diameter)

$t_{alum} := 0.100in$ (Aluminum Thickness)

$F_{y_alum} := 25 \cdot ksi$ (Minimum Yield Strength of Aluminum)

$F_{u_alum} := 30 \cdot ksi$ (Minimum Ultimate Strength of Aluminum)

Allowable Shear / Bearing Capacity of Screws

$V_{a_screw_AAMA} := 621 \cdot lb$ (Screw Shear Strength Per AAMA TIR-A9-14)

$V_{a_screw_ESR3332} := \frac{2692 \cdot lb}{3} = 897\ lb$ (Screw Shear Strength Per ESR-3332)

$V_{a_screw_ADM} := \frac{2d_1 \cdot t_{alum} \cdot F_{u_alum}}{3} = 500\ lb$ (Screw Shear Bearing Strength Per Aluminum Design Manual 2010 Edition)

$V_{a_screw} := \min(V_{a_screw_AAMA}, V_{a_screw_ESR3332}, V_{a_screw_ADM}) = 500\ lb$

Allowable Tensile / Pull-Out Capacity of Screws

$T_{a_screw_AAMA} := 1075 \cdot lb$ (Screw Tensile Strength Per AAMA TIR-A9-14)

$T_{a_screw_ESR3332} := \frac{4363 \cdot lb}{3} = 1454\ lb$ (Screw Tensile Strength Per ESR-3332)

$T_{a_screw_pullout_AAMA} := 236 \cdot lb$ (Screw Pullout Strength Per AAMA TIR-A9-14)

$T_{a_screw} := \min(T_{a_screw_AAMA}, T_{a_screw_ESR3332}, T_{a_screw_pullout_AAMA}) = 236\ lb$

Check (2) Screws at Each Panel Connection to Thermal Clip

Shear in Screws at Light Panels

$V_{max_light} := \frac{P_{clip_DL_light}}{2} = 8\ lb \quad < \quad V_{a_screw} = 500\ lb$

$if(V_{max_light} < V_{a_screw}, "O.K.", "N.G.") = "O.K."$

Shear in Screws at Heavy Panels

$V_{max_heavy} := \frac{P_{clip_DL_heavy}}{2} = 15\ lb \quad < \quad V_{a_screw} = 500\ lb$

$if(V_{max_heavy} < V_{a_screw}, "O.K.", "N.G.") = "O.K."$

Tension in Screws at Panels in Typical Wind Zones

$T_{max_tz} := \frac{P_{clip_WL_tz}}{2} = 60\ lb \quad < \quad T_{a_screw} = 236\ lb$

$if(T_{max_tz} < T_{a_screw}, "O.K.", "N.G.") = "O.K."$

Tension in Screws at Panels in Corner Wind Zones

$$T_{max_cz} := \frac{P_{clip_WL_cz}}{2} = 100\,lb \qquad < \qquad T_{a_screw} = 236\,lb$$

$$if(T_{max_cz} < T_{a_screw}, "O.K.", "N.G.") = "O.K."$$

Check (2) 1/4" Diameter Hilti KWIK-CON II (1"nominal embedment into 3000 psi NW concrete)

Allowable Shear / Bearing Capacity of Screws

$V_{a_screw2} := 357 \cdot lb$ (Allowable Screw Shear Strength per Hilti North America Product Technical Guide 2016 Volume 2 Edition 16)

Allowable Tensile / Pull-Out Capacity of Screws

$T_{a_screw2} := 215 \cdot lb$ (Allowable Screw Tensile Strength Per Hilti North America Product Technical Guide 2016 Volume 2 Edition 16)

Check (2) Screws at Each Thermal Clip Connection to Concrete Wall

Shear in Screws at Light Panels

$$V_{max_light2} := \frac{P_{clip_DL_light}}{2} = 8\,lb \qquad < \qquad V_{a_screw2} = 357\,lb$$

$$if(V_{max_light2} < V_{a_screw2}, "O.K.", "N.G.") = "O.K."$$

Shear in Screws at Heavy Panels

$$V_{max_heavy2} := \frac{P_{clip_DL_heavy}}{2} = 15\,lb \qquad < \qquad V_{a_screw2} = 357\,lb$$

$$if(V_{max_heavy2} < V_{a_screw2}, "O.K.", "N.G.") = "O.K."$$

Tension in Screws at Light Panels in Typical Wind Zones

$$T_{max_tz_light} := \frac{P_{clip_WL_tz}}{2} + \frac{P_{clip_DL_light} \cdot 3.75in}{3in} = 80\,lb \qquad < \qquad T_{a_screw2} = 215\,lb$$

$$if(T_{max_tz_light} < T_{a_screw2}, "O.K.", "N.G.") = "O.K."$$

Tension in Screws at Light Panels in Corner Wind Zones

$$T_{max_cz_light} := \frac{P_{clip_WL_cz}}{2} + \frac{P_{clip_DL_light} \cdot 3.75in}{3in} = 120\,lb \quad < \quad T_{a_screw2} = 215\,lb$$

$$if(T_{max_cz_light} < T_{a_screw2}, "O.K.", "N.G.") = "O.K."$$

Tension in Screws at Heavy Panels in Typical Wind Zones

$$T_{max_tz_heavy} := \frac{P_{clip_WL_tz}}{2} + \frac{P_{clip_DL_heavy} \cdot 3.75in}{3in} = 98\,lb \quad < \quad T_{a_screw2} = 215\,lb$$

$$if(T_{max_tz_heavy} < T_{a_screw2}, "O.K.", "N.G.") = "O.K."$$

Tension in Screws at Heavy Panels in Corner Wind Zones

$$T_{max_cz_heavy} := \frac{P_{clip_WL_cz}}{2} + \frac{P_{clip_DL_heavy} \cdot 3.75in}{3in} = 138\,lb \quad < \quad T_{a_screw2} = 215\,lb$$

$$if(T_{max_cz_heavy} < T_{a_screw2}, "O.K.", "N.G.") = "O.K."$$

$$CSR := \frac{T_{max_cz_heavy}}{T_{a_screw2}} + \frac{V_{max_heavy2}}{V_{a_screw2}} = 0.687 \quad < \quad 1.000$$

$$if(CSR < 1.000, "O.K.", "N.G.") = "O.K."$$

Check Compression Stress in Thermal Block Material

$$T_{max} := max(T_{max_tz_light}, T_{max_cz_light}, T_{max_tz_heavy}, T_{max_cz_heavy}) = 138\,lb$$

$$C_{max} := T_{max} = 138\,lb$$

$F_{c_25} := 9840psi$ Compressive strength of block material (25% Glass Fill)

$F_{c_40} := 13600psi$ Compressive strength of block material (40% Glass Fill)

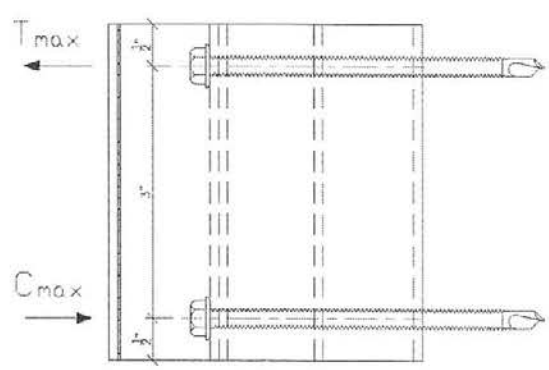

Consider all compressive to act at bottom 1" of block.

$t_{block_wall} := 0.0984in$

$f_c := \frac{C_{max}}{4 \cdot 1in \cdot 0.0984in} = 352 \cdot psi$ <<< $F_{c_25} = 9840 \cdot psi$

Compression stress in block material is much less than than the material compressive strength. Block material is adequate for imposed compressive force.

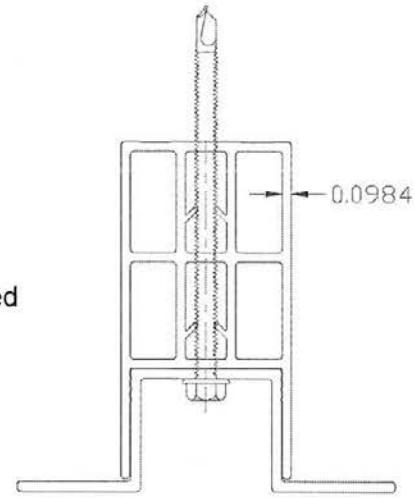

Check 0.100" 6063-T6 Aluminum Clip (Fy=25 ksi min., Fu=30 ksi min.)

$t_{alum} = 0.1000 \cdot in$ (Aluminum Thickness)

$L_{alum} := 4in$ (Aluminum Length)

$F_{y_alum} = 25 \cdot ksi$ (Minimum Yield Strength of Aluminum)

$F_{u_alum} = 30 \cdot ksi$ (Minimum Ultimate Strength of Aluminum)

$F_{su_alum} := 19ksi$ (Minimum Ultimate Shear Strength of Aluminum)

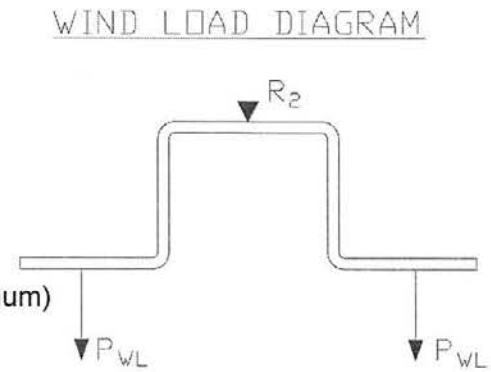

Wind Load at Screw Locations

$$P_{WL} := \max\left(\frac{P_{clip_WL_tz}}{2}, \frac{P_{clip_WL_cz}}{2}\right) = 100\,lb$$

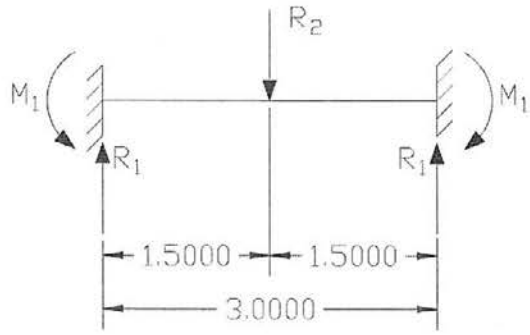

Wind Load Reaction at R2 Location

$$R_{2_WL} := 2 \cdot P_{WL} = 200\,lb$$

Weak Axis Moment / Stress at R2 Location From Wind Load

$$M_{max_wa_R2} := \frac{R_{2_WL} \cdot 3in}{8} = 75 \cdot in \cdot lb$$

$$f_{b_wa_R2} := \frac{M_{max_wa_R2}}{\frac{1}{6} \cdot L_{alum} \cdot t_{alum}^2} = 11250 \cdot psi$$

$$F_{b_wa_alum} := 19700 \cdot psi$$

$$f_{b_wa_R2} = 11250 \cdot psi \quad < \quad F_{b_wa_alum} = 19700 \cdot psi$$

$$if(f_{b_wa_R2} < F_{b_wa_alum}, "O.K.", "N.G.") = "O.K."$$

Dead Load at Screw Locations

$$P_{DL} := \max\left(\frac{P_{clip_DL_light}}{2}, \frac{P_{clip_DL_heavy}}{2}\right) = 15\,lb$$

Dead Load Reaction at R_2 Location

$$R_{2_DL} := 2 \cdot P_{DL} = 31\,lb$$

Strong Axis Moment / Stress at R_2 Location

$$M_{max_sa_DL} := \frac{R_{2_DL} \cdot 3in}{4} = 23 \cdot in \cdot lb$$

$$f_{b_sa_DL} := \frac{M_{max_sa_DL}}{\frac{1}{6} \cdot t_{alum} \cdot L_{alum}^2} = 87 \cdot psi$$

$$S_{b_limit} := \frac{L_{alum}}{t_{alum}} \cdot \sqrt{\left(\frac{1.5in}{1.0 \cdot L_{alum}}\right)} = 24$$

$$F_{b_sa_alum} := 27.9ksi - 0.532ksi \cdot (S_{b_limit}) = 14869 \cdot psi$$

$$f_{b_sa_DL} = 87 \cdot psi \quad < \quad F_{b_sa_alum} = 14869 \cdot psi$$

$$if(f_{b_sa_DL} < F_{b_sa_alum}, "O.K.", "N.G.") = "O.K."$$

DEAD LOAD DIAGRAM

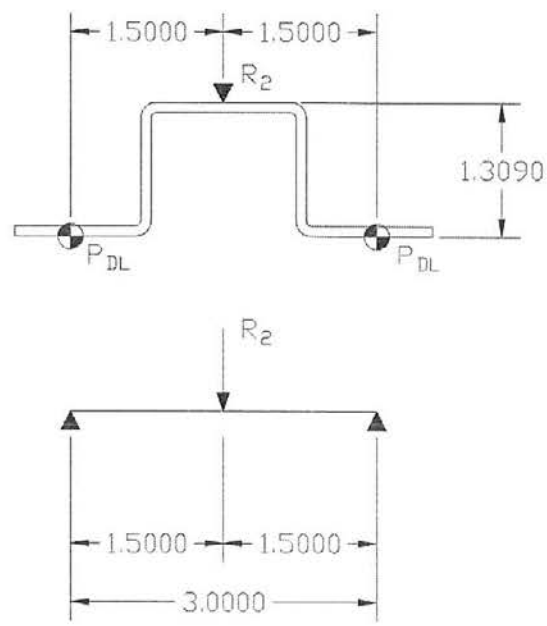

Torsional Moment / Stress at R_2 Location

$$M_{max_v\tau_R2} := P_{DL} \cdot 1.3090in = 20 \cdot in \cdot lb$$

$$f_{v\tau_R2} := \frac{M_{max_v\tau_R2} \cdot t_{alum}}{\frac{1}{3} \cdot L_{alum} \cdot t_{alum}^{3}} = 1512 \cdot psi$$

$$S_{v\tau_limit} := \frac{L_{alum}}{t_{alum}} = 40$$

$$F_{v\tau_alum} := 11.5ksi - 0.062ksi \cdot \left(S_{v\tau_limit}\right) = 9020 \cdot psi$$

$$f_{v\tau_R2} = 1512 \cdot psi \quad < \quad F_{v\tau_alum} = 9020 \cdot psi$$

$$if\left(f_{v\tau_R2} < F_{v\tau_alum}, \text{" O.K. "}, \text{" N.G. "}\right) = \text{" O.K. "}$$

Combined Stress Ratio

$$CSR_{alum} := \left(\frac{f_{b_wa_R2}}{F_{b_wa_alum}} + \frac{f_{b_sa_DL}}{F_{b_sa_alum}}\right)^2 + \left(\frac{f_{v\tau_R2}}{F_{v\tau_alum}}\right)^2 = 0.361 \quad < \quad 1.000$$

$$if\left(CSR_{alum} < 1.000, \text{" O.K. "}, \text{" N.G. "}\right) = \text{" O.K. "}$$

THERMAL CLIP ANALYSIS

(ATTACHED TO HOLLOW CORE CMU WALL)

Thermal Clip Analysis: Attached to 1500 psi Hollow Core Concrete Masonry Units

Basis of Design Information

$S_{horiz} := 16in$ (Horizontal Spacing of Thermal Clips - Basis of Design Clip Spacing)

$S_{t_clip} := 36in$ (Vertical Spacing of Thermal Clips - Basis of Design Clip Spacing)

$A := S_{horiz} \cdot S_{t_clip} = 4\,ft^2$ (Panel Area Per Thermal Clip - Basis of Design)

$WL_{tz} := 30 \cdot psf$ (Basis of Design Wind Pressure - Typical Wind Zone of Building)

$WL_{cz} := 50 \cdot psf$ (Basis of Design Wind Pressure - Corner Wind Zone of Building)

$DL_{pnl_light} := 2.0 \cdot psf$ (Basis of Design "Light" Panel Weight - 1/8" Solid Aluminum or 4mm ACM)

$DL_{pnl_heavy} := 5.7 \cdot psf$ (Basis of Design "Heavy" Panel Weight - 1/2" TATKL)

$DL_{misc} := 2.0 \cdot psf$ (Basis of Design Miscellanleous Materials - Extrusions / Z-Girts of Panel System)

Basis of Design Load Determination

Wind Load Reaction Per Thermal Clip

$P_{clip_WL_tz} := A \cdot WL_{tz} = 120\,lb$ (Wind Load Reaction at Clips in Typical Zone Wind Region)

$P_{clip_WL_cz} := A \cdot WL_{cz} = 200\,lb$ (Wind Load Reaction at Clips in Corner Zone Wind Region)

Dead Load Reaction Per Thermal Clip

$P_{clip_DL_light} := A \cdot (DL_{pnl_light} + DL_{misc}) = 16\,lb$ (Dead Load Reaction - Light Panels)

$P_{clip_DL_heavy} := A \cdot (DL_{pnl_heavy} + DL_{misc}) = 31\,lb$ (Dead Load Reaction - Heavy Panels)

Check 1/4-14 Dril-Flex into 0.100" 6063-T6 Aluminum Material (Fy=25 ksi min., Fu=30 ksi min.)

$d_1 := 0.25in$ (Screw Diameter)

$t_{alum} := 0.100in$ (Aluminum Thickness)

$F_{y_alum} := 25 \cdot ksi$ (Minimum Yield Strength of Aluminum)

$F_{u_alum} := 30 \cdot ksi$ (Minimum Ultimate Strength of Aluminum)

Allowable Shear / Bearing Capacity of Screws

$V_{a_screw_AAMA} := 621 \cdot lb$ (Screw Shear Strength Per AAMA TIR-A9-14)

$V_{a_screw_ESR3332} := \frac{2692 \cdot lb}{3} = 897\ lb$ (Screw Shear Strength Per ESR-3332)

$V_{a_screw_ADM} := \frac{2d_1 \cdot t_{alum} \cdot F_{u_alum}}{3} = 500\ lb$ (Screw Shear Bearing Strength Per Aluminum Design Manual 2010 Edition)

$V_{a_screw} := \min(V_{a_screw_AAMA}, V_{a_screw_ESR3332}, V_{a_screw_ADM}) = 500\ lb$

Allowable Tensile / Pull-Out Capacity of Screws

$T_{a_screw_AAMA} := 1075 \cdot lb$ (Screw Tensile Strength Per AAMA TIR-A9-14)

$T_{a_screw_ESR3332} := \frac{4363 \cdot lb}{3} = 1454\ lb$ (Screw Tensile Strength Per ESR-3332)

$T_{a_screw_pullout_AAMA} := 236 \cdot lb$ (Screw Pullout Strength Per AAMA TIR-A9-14)

$T_{a_screw} := \min(T_{a_screw_AAMA}, T_{a_screw_ESR3332}, T_{a_screw_pullout_AAMA}) = 236\ lb$

Check (2) Screws at Each Panel Connection to Thermal Clip

Shear in Screws at Light Panels

$V_{max_light} := \frac{P_{clip_DL_light}}{2} = 8\ lb \quad < \quad V_{a_screw} = 500\ lb$

$\text{if}(V_{max_light} < V_{a_screw}, \text{" O.K. "}, \text{" N.G. "}) = \text{" O.K. "}$

Shear in Screws at Heavy Panels

$V_{max_heavy} := \frac{P_{clip_DL_heavy}}{2} = 15\ lb \quad < \quad V_{a_screw} = 500\ lb$

$\text{if}(V_{max_heavy} < V_{a_screw}, \text{" O.K. "}, \text{" N.G. "}) = \text{" O.K. "}$

Tension in Screws at Panels in Typical Wind Zones

$T_{max_tz} := \frac{P_{clip_WL_tz}}{2} = 60\ lb \quad < \quad T_{a_screw} = 236\ lb$

$\text{if}(T_{max_tz} < T_{a_screw}, \text{" O.K. "}, \text{" N.G. "}) = \text{" O.K. "}$

Tension in Screws at Panels in Corner Wind Zones

$$T_{max_cz} := \frac{P_{clip_WL_cz}}{2} = 100\,lb \qquad < \qquad T_{a_screw} = 236\,lb$$

$$if(T_{max_cz} < T_{a_screw}, "O.K.", "N.G.") = "O.K."$$

Check (2) 1/4" Diameter Hilti KWIK-CON II (1"nominal embedment into 1500 psi NW,LW or MW hollow concrete block conforming to ASDTM C90)

Allowable Shear / Bearing Capacity of Screws

$V_{a_screw2} := 275 \cdot lb$ (Allowable Screw Shear Strength per Hilti North America Product Technical Guide 2016 Volume 2 Edition 16)

Allowable Tensile / Pull-Out Capacity of Screws

$T_{a_screw2} := 165 \cdot lb$ (Allowable Screw Tensile Strength Per Hilti North America Product Technical Guide 2016 Volume 2 Edition 16)

Check (2) Screws at Each Thermal Clip Connection to CMU Wall

Shear in Screws at Light Panels

$$V_{max_light2} := \frac{P_{clip_DL_light}}{2} = 8\,lb \qquad < \qquad V_{a_screw2} = 275\,lb$$

$$if(V_{max_light2} < V_{a_screw2}, "O.K.", "N.G.") = "O.K."$$

Shear in Screws at Heavy Panels

$$V_{max_heavy2} := \frac{P_{clip_DL_heavy}}{2} = 15\,lb \qquad < \qquad V_{a_screw2} = 275\,lb$$

$$if(V_{max_heavy2} < V_{a_screw2}, "O.K.", "N.G.") = "O.K."$$

Tension in Screws at Light Panels in Typical Wind Zones

$$T_{max_tz_light} := \frac{P_{clip_WL_tz}}{2} + \frac{P_{clip_DL_light} \cdot 3.75in}{3in} = 80\,lb \qquad < \qquad T_{a_screw2} = 165\,lb$$

$$if(T_{max_tz_light} < T_{a_screw2}, "O.K.", "N.G.") = "O.K."$$

Tension in Screws at Light Panels in Corner Wind Zones

$$T_{max_cz_light} := \frac{P_{clip_WL_cz}}{2} + \frac{P_{clip_DL_light} \cdot 3.75in}{3in} = 120\,lb \quad < \quad T_{a_screw2} = 165\,lb$$

$$if(T_{max_cz_light} < T_{a_screw2}, "O.K.", "N.G.") = "O.K."$$

Tension in Screws at Heavy Panels in Typical Wind Zones

$$T_{max_tz_heavy} := \frac{P_{clip_WL_tz}}{2} + \frac{P_{clip_DL_heavy} \cdot 3.75in}{3in} = 98\,lb \quad < \quad T_{a_screw2} = 165\,lb$$

$$if(T_{max_tz_heavy} < T_{a_screw2}, "O.K.", "N.G.") = "O.K."$$

Tension in Screws at Heavy Panels in Corner Wind Zones

$$T_{max_cz_heavy} := \frac{P_{clip_WL_cz}}{2} + \frac{P_{clip_DL_heavy} \cdot 3.75in}{3in} = 138\,lb \quad < \quad T_{a_screw2} = 165\,lb$$

$$if(T_{max_cz_heavy} < T_{a_screw2}, "O.K.", "N.G.") = "O.K."$$

$$CSR := \frac{T_{max_cz_heavy}}{T_{a_screw2}} + \frac{V_{max_heavy2}}{V_{a_screw2}} = 0.895 \quad < \quad 1.000$$

$$if(CSR < 1.000, "O.K.", "N.G.") = "O.K."$$

Check Compression Stress in Thermal Block Material

$$T_{max} := max(T_{max_tz_light}, T_{max_cz_light}, T_{max_tz_heavy}, T_{max_cz_heavy}) = 138\,lb$$

$$C_{max} := T_{max} = 138\,lb$$

$F_{c_25} := 9840psi$ Compressive strength of block material (25% Glass Fill)

$F_{c_40} := 13600psi$ Compressive strength of block material (40% Glass Fill)

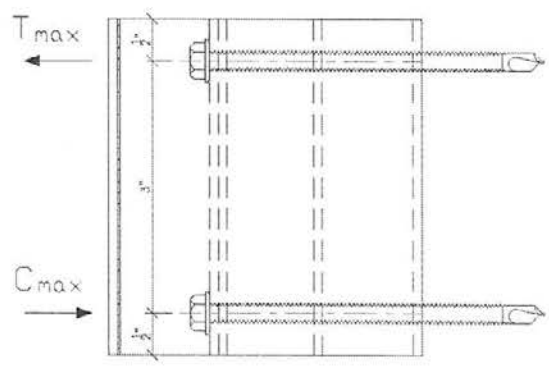

Consider all compressive to act at bottom 1" of block.

$t_{block_wall} := 0.0984in$

$f_c := \frac{C_{max}}{4 \cdot 1in \cdot 0.0984in} = 352 \cdot psi$ <<< $F_{c_25} = 9840 \cdot psi$

Compression stress in block material is much less than than the material compressive strength. Block material is adequate for imposed compressive force.

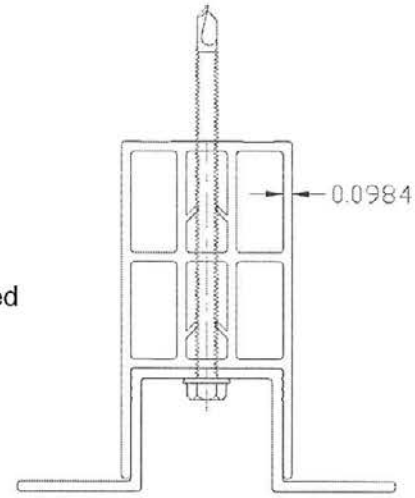

Check 0.100" 6063-T6 Aluminum Clip (Fy=25 ksi min., Fu=30 ksi min.)

$t_{alum} = 0.1000 \cdot in$ (Aluminum Thickness)

$L_{alum} := 4in$ (Aluminum Length)

$F_{y_alum} = 25 \cdot ksi$ (Minimum Yield Strength of Aluminum)

$F_{u_alum} = 30 \cdot ksi$ (Minimum Ultimate Strength of Aluminum)

$F_{su_alum} := 19ksi$ (Minimum Ultimate Shear Strength of Aluminum)

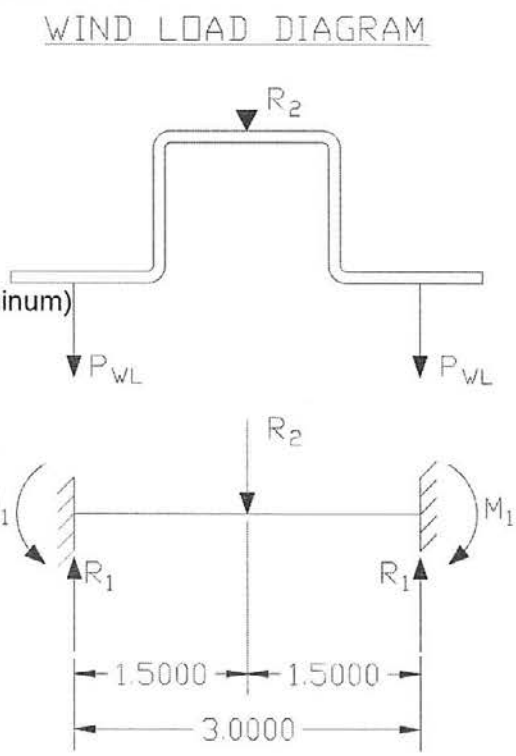

Wind Load at Screw Locations

$$P_{WL} := \max\left(\frac{P_{clip_WL_tz}}{2}, \frac{P_{clip_WL_cz}}{2}\right) = 100\,lb$$

Wind Load Reaction at R2 Location

$$R_{2_WL} := 2 \cdot P_{WL} = 200\,lb$$

Weak Axis Moment / Stress at R2 Location From Wind Load

$$M_{max_wa_R2} := \frac{R_{2_WL} \cdot 3in}{8} = 75 \cdot in \cdot lb$$

$$f_{b_wa_R2} := \frac{M_{max_wa_R2}}{\frac{1}{6} \cdot L_{alum} \cdot t_{alum}^{2}} = 11250 \cdot psi$$

$$F_{b_wa_alum} := 19700 \cdot psi$$

$$f_{b_wa_R2} = 11250 \cdot psi \quad < \quad F_{b_wa_alum} = 19700 \cdot psi$$

$$if(f_{b_wa_R2} < F_{b_wa_alum}, "O.K.", "N.G.") = "O.K."$$

Dead Load at Screw Locations

$$P_{DL} := max\left(\frac{P_{clip_DL_light}}{2}, \frac{P_{clip_DL_heavy}}{2}\right) = 15\,lb$$

Dead Load Reaction at R_2 Location

$$R_{2_DL} := 2 \cdot P_{DL} = 31\,lb$$

Strong Axis Moment / Stress at R_2 Location

$$M_{max_sa_DL} := \frac{R_{2_DL} \cdot 3in}{4} = 23 \cdot in \cdot lb$$

$$f_{b_sa_DL} := \frac{M_{max_sa_DL}}{\frac{1}{6} \cdot t_{alum} \cdot L_{alum}^{2}} = 87 \cdot psi$$

$$S_{b_limit} := \frac{L_{alum}}{t_{alum}} \cdot \sqrt{\left(\frac{1.5in}{1.0 \cdot L_{alum}}\right)} = 24$$

$$F_{b_sa_alum} := 27.9ksi - 0.532ksi \cdot (S_{b_limit}) = 14869 \cdot psi$$

$$f_{b_sa_DL} = 87 \cdot psi \quad < \quad F_{b_sa_alum} = 14869 \cdot psi$$

$$if(f_{b_sa_DL} < F_{b_sa_alum}, "O.K.", "N.G.") = "O.K."$$

DEAD LOAD DIAGRAM

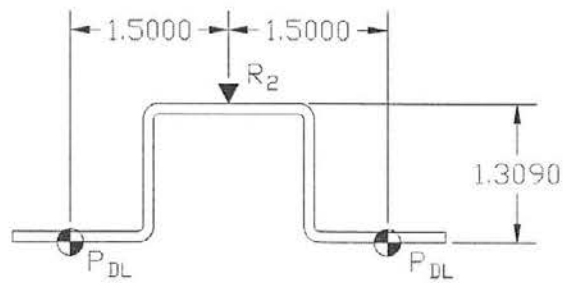

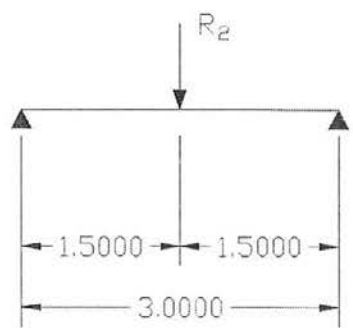

Torsional Moment / Stress at R_2 Location

$$M_{max_v\tau_R2} := P_{DL} \cdot 1.3090in = 20 \cdot in \cdot lb$$

$$f_{v\tau_R2} := \frac{M_{max_v\tau_R2} \cdot t_{alum}}{\frac{1}{3} \cdot L_{alum} \cdot t_{alum}^{3}} = 1512 \cdot psi$$

$$S_{v\tau_limit} := \frac{L_{alum}}{t_{alum}} = 40$$

$$F_{v\tau_alum} := 11.5ksi - 0.062ksi \cdot (S_{v\tau_limit}) = 9020 \cdot psi$$

$$f_{v\tau_R2} = 1512 \cdot psi \quad < \quad F_{v\tau_alum} = 9020 \cdot psi$$

$$if(f_{v\tau_R2} < F_{v\tau_alum}, "O.K.", "N.G.") = "O.K."$$

Combined Stress Ratio

$$CSR_{alum} := \left(\frac{f_{b_wa_R2}}{F_{b_wa_alum}} + \frac{f_{b_sa_DL}}{F_{b_sa_alum}}\right)^2 + \left(\frac{f_{v\tau_R2}}{F_{v\tau_alum}}\right)^2 = 0.361 \quad < \quad 1.000$$

$$if(CSR_{alum} < 1.000, "O.K.", "N.G.") = "O.K."$$

STRUCTURAL TABLES

(CLIP QUANTITY ESTIMATING TABLES)

SQUARE FOOTAGE PER CLIP BASED ON ALLOWABLE WIND LOAD PRESSURE AND CLADDING DEAD LOAD (CLIPS ATTACHED TO 18 GA COLD FORMED METAL STUDS)

WIND LOAD (PSF)	1	2	3	4	5	6	7	8	9	10	11	12	13	14	15	16	17	18	19	20	21	22	23	24	25
150	1	1	1	1	1	1	1	1	1	1	1	1	1	1	1	1	1	1	1	1	1	1	1	1	1
145	1	1	1	1	1	1	1	1	1	1	1	1	1	1	1	1	1	1	1	1	1	1	1	1	1
140	1	1	1	1	1	1	1	1	1	1	1	1	1	1	1	1	1	1	1	1	1	1	1	1	1
135	1	1	1	1	1	1	1	1	1	1	1	1	1	1	1	1	1	1	1	1	1	1	1	1	1
130	1	1	1	1	1	1	1	1	1	1	1	1	1	1	1	1	1	1	1	1	1	1	1	1	1
125	2	2	1	1	1	1	1	1	1	1	1	1	1	1	1	1	1	1	1	1	1	1	1	1	1
120	2	2	2	2	1	1	1	1	1	1	1	1	1	1	1	1	1	1	1	1	1	1	1	1	1
115	2	2	2	2	2	2	1	1	1	1	1	1	1	1	1	1	1	1	1	1	1	1	1	1	1
110	2	2	2	2	2	2	2	2	1	1	1	1	1	1	1	1	1	1	1	1	1	1	1	1	1
105	2	2	2	2	2	2	2	2	2	2	1	1	1	1	1	1	1	1	1	1	1	1	1	1	1
100	2	2	2	2	2	2	2	2	2	2	2	2	1	1	1	1	1	1	1	1	1	1	1	1	1
95	2	2	2	2	2	2	2	2	2	2	2	2	2	2	1	1	1	1	1	1	1	1	1	1	1
90	2	2	2	2	2	2	2	2	2	2	2	2	2	2	2	2	1	1	1	1	1	1	1	1	1
85	2	2	2	2	2	2	2	2	2	2	2	2	2	2	2	2	2	2	1	1	1	1	1	1	1
80	3	3	2	2	2	2	2	2	2	2	2	2	2	2	2	2	2	2	2	2	1	1	1	1	1
75	3	3	3	3	2	2	2	2	2	2	2	2	2	2	2	2	2	2	2	2	2	2	1	1	1
70	3	3	3	3	3	3	2	2	2	2	2	2	2	2	2	2	2	2	2	2	2	2	2	2	1
65	3	3	3	3	3	3	3	3	2	2	2	2	2	2	2	2	2	2	2	2	2	2	2	2	2
60	4	4	3	3	3	3	3	3	3	3	2	2	2	2	2	2	2	2	2	2	2	2	2	2	2
55	4	4	4	4	3	3	3	3	3	3	3	3	2	2	2	2	2	2	2	2	2	2	2	2	2
50	4	4	4	4	4	4	3	3	3	3	3	3	3	3	2	2	2	2	2	2	2	2	2	2	2
45	5	5	4	4	4	4	4	4	3	3	3	3	3	3	3	3	2	2	2	2	2	2	2	2	2
40	6	5	5	5	4	4	4	4	4	4	3	3	3	3	3	3	3	3	2	2	2	2	2	2	2
35	6	6	6	5	5	5	4	4	4	4	4	4	3	3	3	3	3	3	3	3	2	2	2	2	2
30	8	7	6	6	6	5	5	5	4	4	4	4	4	4	3	3	3	3	3	3	3	3	2	2	2
25	9	8	8	7	6	6	6	5	5	5	4	4	4	4	4	4	3	3	3	3	3	3	3	3	2
20	11	10	9	8	8	7	6	6	6	5	5	5	4	4	4	4	4	4	3	3	3	3	3	3	3
15	14	13	11	10	9	8	8	7	6	6	6	5	5	5	4	4	4	4	4	4	3	3	3	3	3
10	20	17	14	13	11	10	9	8	8	7	6	6	6	5	5	5	4	4	4	4	4	4	3	3	3

DEAD LOAD (PSF)

How to use Estimating Table:

1. Determine project specific cladding design wind pressure (psf) and cladding system dead load (psf)
2. Find the corresponding design wind load in the left most column (round up to the nearest increment)
3. Find the corresponding design dead load in the bottom row (round up to the nearest increment)
4. Find the intersecting point on the table to determine the number of square footage each thermal clip can support.
5. Divide the project cladding square footage by the number pulled from the table to determine the approximate number of clips required for the project.

Notes:

1. This table is based on the thermal clips being attached to 18 gauge standard strength metal studs (Fy=33ksi min., Fu=45ksi min.)
2. This table is based on the thermal clips being attached to the metal stud wall with (2) 1/4 -14 x 4" HWH ELCO Dril-Flex Screws with #2 Point at 3" O.C. vertical spacing.
3. This table is based on the use of 3 3/4" deep x 4" long thermal clips
4. This table is based on the thermal clips being oriented with the length of clips running vertically.
5. This table is based on thermal clip capacity and does not account for specific support requirements of various cladding systems & joineries that may have an impact on the required clip quantity for the project.
6. Although combinations of the lower pressures indicate a relatively high square footage per clip, most cladding systems will require more clips than indicated for adequate support.
7. Load combinations resulting in tabulated values of (1) square foot per clip may require a closer stud spacing than the traditional 16" o.c. wall construction.

SQUARE FOOTAGE PER CLIP BASED ON ALLOWABLE WIND LOAD PRESSURE AND CLADDING DEAD LOAD (CLIPS ATTACHED TO 16 GA COLD FORMED METAL STUDS)

WIND LOAD (PSF)	1	2	3	4	5	6	7	8	9	10	11	12	13	14	15	16	17	18	19	20	21	22	23	24	25
150	2	2	2	2	2	2	2	2	2	2	1	1	1	1	1	1	1	1	1	1	1	1	1	1	1
145	2	2	2	2	2	2	2	2	2	2	2	2	1	1	1	1	1	1	1	1	1	1	1	1	1
140	2	2	2	2	2	2	2	2	2	2	2	2	2	2	1	1	1	1	1	1	1	1	1	1	1
135	2	2	2	2	2	2	2	2	2	2	2	2	2	2	2	2	1	1	1	1	1	1	1	1	1
130	2	2	2	2	2	2	2	2	2	2	2	2	2	2	2	2	2	2	1	1	1	1	1	1	1
125	2	2	2	2	2	2	2	2	2	2	2	2	2	2	2	2	2	2	2	2	1	1	1	1	1
120	2	2	2	2	2	2	2	2	2	2	2	2	2	2	2	2	2	2	2	2	2	2	1	1	1
115	3	2	2	2	2	2	2	2	2	2	2	2	2	2	2	2	2	2	2	2	2	2	2	2	1
110	3	3	3	2	2	2	2	2	2	2	2	2	2	2	2	2	2	2	2	2	2	2	2	2	2
105	3	3	3	3	3	2	2	2	2	2	2	2	2	2	2	2	2	2	2	2	2	2	2	2	2
100	3	3	3	3	3	3	3	2	2	2	2	2	2	2	2	2	2	2	2	2	2	2	2	2	2
95	3	3	3	3	3	3	3	3	3	2	2	2	2	2	2	2	2	2	2	2	2	2	2	2	2
90	3	3	3	3	3	3	3	3	3	3	3	2	2	2	2	2	2	2	2	2	2	2	2	2	2
85	4	3	3	3	3	3	3	3	3	3	3	3	3	2	2	2	2	2	2	2	2	2	2	2	2
80	4	4	4	3	3	3	3	3	3	3	3	3	3	3	3	2	2	2	2	2	2	2	2	2	2
75	4	4	4	4	4	3	3	3	3	3	3	3	3	3	3	3	3	2	2	2	2	2	2	2	2
70	4	4	4	4	4	4	4	3	3	3	3	3	3	3	3	3	3	3	3	2	2	2	2	2	2
65	5	5	4	4	4	4	4	4	4	3	3	3	3	3	3	3	3	3	3	3	3	2	2	2	2
60	5	5	5	5	4	4	4	4	4	4	4	3	3	3	3	3	3	3	3	3	3	3	3	2	2
55	6	5	5	5	5	5	4	4	4	4	4	4	4	3	3	3	3	3	3	3	3	3	3	3	3
50	6	6	6	5	5	5	5	5	4	4	4	4	4	4	4	3	3	3	3	3	3	3	3	3	3
45	7	7	6	6	6	5	5	5	5	5	4	4	4	4	4	4	4	3	3	3	3	3	3	3	3
40	8	7	7	7	6	6	6	5	5	5	5	5	4	4	4	4	4	4	4	3	3	3	3	3	3
35	9	8	8	7	7	7	6	6	6	5	5	5	5	5	4	4	4	4	4	4	4	3	3	3	3
30	10	10	9	8	8	7	7	7	6	6	6	5	5	5	5	5	4	4	4	4	4	4	4	3	3
25	12	11	10	10	9	8	8	7	7	7	6	6	6	5	5	5	5	5	4	4	4	4	4	4	4
20	15	14	12	11	10	10	9	8	8	7	7	7	6	6	6	5	5	5	5	5	4	4	4	4	4
15	20	17	15	14	12	11	10	10	9	8	8	7	7	7	6	6	6	5	5	5	5	5	4	4	4
10	28	23	20	17	15	14	12	11	10	10	9	8	8	7	7	7	6	6	6	5	5	5	5	5	4

DEAD LOAD (PSF)

How to use Estimating Table:

1. Determine project specific cladding design wind pressure (psf) and cladding system dead load (psf)
2. Find the corresponding design wind load in the left most column (round up to the nearest increment)
3. Find the corresponding design dead load in the bottom row (round up to the nearest increment)
4. Find the intersecting point on the table to determine the number of square footage each thermal clip can support.
5. Divide the project cladding square footage by the number pulled from the table to determine the approximate number of clips required for the project.

Notes:

1. This table is based on the thermal clips being attached to 16 gauge standard strength metal studs (Fy=33ksi min., Fu=45ksi min.)
2. This table is based on the thermal clips being attached to the metal stud wall with (2) 1/4 -14 x 4" HWH ELCO Dril-Flex Screws with #2 Point at 3" O.C. vertical spacing.
3. This table is based on the use of 3 3/4" deep x 4" long thermal clips
4. This table is based on the thermal clips being oriented with the length of clips running vertically.
5. This table is based on thermal clip capacity and does not account for specific support requirements of various cladding systems & joineries that may have an impact on the required clip quantity for the project.
6. Although combinations of the lower pressures indicate a relatively high square footage per clip, most cladding systems will require more clips than indicated for adequate support.
7. Load combinations resulting in tabulated values of (1) square foot per clip may require a closer stud spacing than the traditional 16" o.c. wall construction.

SQUARE FOOTAGE PER CLIP BASED ON ALLOWABLE WIND LOAD PRESSURE AND CLADDING DEAD LOAD (CLIPS ATTACHED TO WOOD STUD WALL)

WIND LOAD (PSF)	1	2	3	4	5	6	7	8	9	10	11	12	13	14	15	16	17	18	19	20	21	22	23	24	25
150	2	2	2	2	2	2	2	2	2	2	1	1	1	1	1	1	1	1	1	1	1	1	1	1	1
145	2	2	2	2	2	2	2	2	2	2	2	2	1	1	1	1	1	1	1	1	1	1	1	1	1
140	2	2	2	2	2	2	2	2	2	2	2	2	2	2	1	1	1	1	1	1	1	1	1	1	1
135	2	2	2	2	2	2	2	2	2	2	2	2	2	2	2	2	1	1	1	1	1	1	1	1	1
130	2	2	2	2	2	2	2	2	2	2	2	2	2	2	2	2	2	2	1	1	1	1	1	1	1
125	2	2	2	2	2	2	2	2	2	2	2	2	2	2	2	2	2	2	2	2	1	1	1	1	1
120	2	2	2	2	2	2	2	2	2	2	2	2	2	2	2	2	2	2	2	2	2	2	1	1	1
115	2	2	2	2	2	2	2	2	2	2	2	2	2	2	2	2	2	2	2	2	2	2	2	2	1
110	3	3	2	2	2	2	2	2	2	2	2	2	2	2	2	2	2	2	2	2	2	2	2	2	2
105	3	3	3	3	2	2	2	2	2	2	2	2	2	2	2	2	2	2	2	2	2	2	2	2	2
100	3	3	3	3	3	3	2	2	2	2	2	2	2	2	2	2	2	2	2	2	2	2	2	2	2
95	3	3	3	3	3	3	3	3	2	2	2	2	2	2	2	2	2	2	2	2	2	2	2	2	2
90	3	3	3	3	3	3	3	3	3	3	2	2	2	2	2	2	2	2	2	2	2	2	2	2	2
85	4	3	3	3	3	3	3	3	3	3	3	3	2	2	2	2	2	2	2	2	2	2	2	2	2
80	4	4	4	3	3	3	3	3	3	3	3	3	3	3	2	2	2	2	2	2	2	2	2	2	2
75	4	4	4	4	4	3	3	3	3	3	3	3	3	3	3	3	2	2	2	2	2	2	2	2	2
70	4	4	4	4	4	4	4	3	3	3	3	3	3	3	3	3	3	3	2	2	2	2	2	2	2
65	5	5	4	4	4	4	4	4	4	3	3	3	3	3	3	3	3	3	3	3	2	2	2	2	2
60	5	5	5	5	4	4	4	4	4	4	4	3	3	3	3	3	3	3	3	3	3	3	2	2	2
55	6	5	5	5	5	5	4	4	4	4	4	4	4	3	3	3	3	3	3	3	3	3	3	3	2
50	6	6	6	5	5	5	5	5	4	4	4	4	4	4	4	3	3	3	3	3	3	3	3	3	3
45	7	7	6	6	6	5	5	5	5	5	4	4	4	4	4	4	4	3	3	3	3	3	3	3	3
40	8	7	7	7	6	6	6	5	5	5	5	5	4	4	4	4	4	4	4	3	3	3	3	3	3
35	9	8	8	7	7	7	6	6	6	5	5	5	5	5	4	4	4	4	4	4	4	3	3	3	3
30	10	10	9	8	8	7	7	7	6	6	6	5	5	5	5	5	4	4	4	4	4	4	4	3	3
25	12	11	10	10	9	8	8	7	7	7	6	6	6	5	5	5	5	5	4	4	4	4	4	4	4
20	15	14	12	11	10	10	9	8	8	7	7	7	6	6	6	5	5	5	5	5	4	4	4	4	4
15	20	17	15	14	12	11	10	10	9	8	8	7	7	7	6	6	6	5	5	5	5	5	4	4	4
10	28	23	20	17	15	14	12	11	10	10	9	8	8	7	7	7	6	6	6	5	5	5	5	5	4

DEAD LOAD (PSF)

How to use Estimating Table:

1. Determine project specific cladding design wind pressure (psf) and cladding system dead load (psf)
2. Find the corresponding design wind load in the left most column (round up to the nearest increment)
3. Find the corresponding design dead load in the bottom row (round up to the nearest increment)
4. Find the intersecting point on the table to determine the number of square footage each thermal clip can support.
5. Divide the project cladding square footage by the number pulled from the table to determine the approximate number of clips required for the project.

Notes:

1. This table is based on the thermal clips being attached to Spruce-Pine-Fir wood studs with a specific gravity of 0.42
2. This table is based on the thermal clips being attached to the wood studs with (2) #14 Wood screws at 3" O.C. vertical spacing with a 1.5" nominal penetration into the wood studs.
3. This table is based on the thermal clips being attached with (2) #14 Wood screws with bending yield strength Fyb=70,000 psi min.
4. This table is based on the use of 3 3/4" deep x 4" long thermal clips.
5. This table is based on the thermal clips being oriented with the length of clips running vertically.
6. This table is based on thermal clip capacity and does not account for specific support requirements of various cladding systems & joineries that may have an impact on the required clip quantity for the project.
7. Although combinations of the lower pressures indicate a relatively high square footage per clip, most cladding systems will require more clips than indicated for adequate support.
8. Load combinations resulting in tabulated values of (1) square foot per clip may require a closer stud spacing than the traditional 16" o.c. wall construction.

SQUARE FOOTAGE PER CLIP BASED ON ALLOWABLE WIND LOAD PRESSURE AND CLADDING DEAD LOAD (CLIPS ATTACHED TO 3000 PSI NW CONCRETE WALL)

WIND LOAD (PSF)	1	2	3	4	5	6	7	8	9	10	11	12	13	14	15	16	17	18	19	20	21	22	23	24	25
150	2	2	2	2	2	2	2	2	2	2	2	2	2	2	2	2	2	2	2	2	2	2	2	2	2
145	2	2	2	2	2	2	2	2	2	2	2	2	2	2	2	2	2	2	2	2	2	2	2	2	2
140	3	2	2	2	2	2	2	2	2	2	2	2	2	2	2	2	2	2	2	2	2	2	2	2	2
135	3	3	3	2	2	2	2	2	2	2	2	2	2	2	2	2	2	2	2	2	2	2	2	2	2
130	3	3	3	3	3	2	2	2	2	2	2	2	2	2	2	2	2	2	2	2	2	2	2	2	2
125	3	3	3	3	3	3	3	2	2	2	2	2	2	2	2	2	2	2	2	2	2	2	2	2	2
120	3	3	3	3	3	3	3	3	3	2	2	2	2	2	2	2	2	2	2	2	2	2	2	2	2
115	3	3	3	3	3	3	3	3	3	3	3	2	2	2	2	2	2	2	2	2	2	2	2	2	2
110	3	3	3	3	3	3	3	3	3	3	3	3	3	2	2	2	2	2	2	2	2	2	2	2	2
105	4	3	3	3	3	3	3	3	3	3	3	3	3	3	3	2	2	2	2	2	2	2	2	2	2
100	4	4	4	3	3	3	3	3	3	3	3	3	3	3	3	3	3	2	2	2	2	2	2	2	2
95	4	4	4	4	4	3	3	3	3	3	3	3	3	3	3	3	3	3	3	2	2	2	2	2	2
90	4	4	4	4	4	4	4	3	3	3	3	3	3	3	3	3	3	3	3	3	3	2	2	2	2
85	4	4	4	4	4	4	4	4	4	3	3	3	3	3	3	3	3	3	3	3	3	3	3	2	2
80	5	5	4	4	4	4	4	4	4	4	4	3	3	3	3	3	3	3	3	3	3	3	3	3	3
75	5	5	5	5	4	4	4	4	4	4	4	4	4	3	3	3	3	3	3	3	3	3	3	3	3
70	5	5	5	5	5	5	4	4	4	4	4	4	4	4	4	3	3	3	3	3	3	3	3	3	3
65	6	6	5	5	5	5	5	5	4	4	4	4	4	4	4	4	4	3	3	3	3	3	3	3	3
60	6	6	6	6	5	5	5	5	5	5	4	4	4	4	4	4	4	4	4	3	3	3	3	3	3
55	7	7	6	6	6	6	5	5	5	5	5	5	4	4	4	4	4	4	4	4	4	3	3	3	3
50	8	7	7	7	6	6	6	6	5	5	5	5	5	5	4	4	4	4	4	4	4	4	4	3	3
45	9	8	8	7	7	7	6	6	6	6	5	5	5	5	5	5	4	4	4	4	4	4	4	4	4
40	10	9	9	8	8	7	7	7	6	6	6	6	5	5	5	5	5	5	4	4	4	4	4	4	4
35	11	10	10	9	9	8	8	7	7	7	6	6	6	6	5	5	5	5	5	5	4	4	4	4	4
30	13	12	11	10	10	9	9	8	8	7	7	7	6	6	6	6	5	5	5	5	5	5	4	4	4
25	15	14	13	12	11	10	10	9	9	8	8	7	7	7	6	6	6	6	5	5	5	5	5	5	4
20	19	17	15	14	13	12	11	10	10	9	9	8	8	7	7	7	6	6	6	6	5	5	5	5	5
15	24	21	19	17	15	14	13	12	11	10	10	9	9	8	8	7	7	7	6	6	6	6	5	5	5
10	34	28	24	21	19	17	15	14	13	12	11	10	10	9	9	8	8	7	7	7	6	6	6	6	5

DEAD LOAD (PSF)

How to use Estimating Table:

1. Determine project specific cladding design wind pressure (psf) and cladding system dead load (psf)
2. Find the corresponding design wind load in the left most column (round up to the nearest increment)
3. Find the corresponding design dead load in the bottom row (round up to the nearest increment)
4. Find the intersecting point on the table to determine the number of square footage each thermal clip can support.
5. Divide the project cladding square footage by the number pulled from the table to determine the approximate number of clips required for the project.

Notes:

1. This table is based on the thermal clips being attached to 3000 psi min compressive strength NW concrete (6" Thick minimum)
2. This table is based on the thermal clips being attached to the concrete wall with (2) 1/4" Hilti KWIK-CON II+ Concrete screw at 3" O.C. vertical spacing with a 1" nominal embedment depth.
3. This table is based on the use of 3 3/4" deep x 4" long thermal clips
4. This table is based on the thermal clips being oriented with the length of clips running vertically.
5. This table is based on thermal clip capacity and does not account for specific support requirements of various cladding systems & joineries that may have an impact on the required clip quantity for the project.
6. Although combinations of the lower pressures indicate a relatively high square footage per clip, most cladding systems will require more clips than indicated for adequate support.

SQUARE FOOTAGE PER CLIP BASED ON ALLOWABLE WIND LOAD PRESSURE AND CLADDING DEAD LOAD (CLIPS ATTACHED TO HOLLOW CORE CONCRETE MASONRY UNITS)

WIND LOAD (PSF)																									
150	2	2	2	2	2	2	1	1	1	1	1	1	1	1	1	1	1	1	1	1	1	1	1	1	1
145	2	2	2	2	2	2	2	2	1	1	1	1	1	1	1	1	1	1	1	1	1	1	1	1	1
140	2	2	2	2	2	2	2	2	2	2	1	1	1	1	1	1	1	1	1	1	1	1	1	1	1
135	2	2	2	2	2	2	2	2	2	2	2	2	1	1	1	1	1	1	1	1	1	1	1	1	1
130	2	2	2	2	2	2	2	2	2	2	2	2	2	2	1	1	1	1	1	1	1	1	1	1	1
125	2	2	2	2	2	2	2	2	2	2	2	2	2	2	2	2	1	1	1	1	1	1	1	1	1
120	2	2	2	2	2	2	2	2	2	2	2	2	2	2	2	2	2	2	1	1	1	1	1	1	1
115	2	2	2	2	2	2	2	2	2	2	2	2	2	2	2	2	2	2	2	2	1	1	1	1	1
110	2	2	2	2	2	2	2	2	2	2	2	2	2	2	2	2	2	2	2	2	2	2	1	1	1
105	3	3	2	2	2	2	2	2	2	2	2	2	2	2	2	2	2	2	2	2	2	2	2	2	1
100	3	3	3	3	2	2	2	2	2	2	2	2	2	2	2	2	2	2	2	2	2	2	2	2	2
95	3	3	3	3	3	3	2	2	2	2	2	2	2	2	2	2	2	2	2	2	2	2	2	2	2
90	3	3	3	3	3	3	3	3	2	2	2	2	2	2	2	2	2	2	2	2	2	2	2	2	2
85	3	3	3	3	3	3	3	3	3	3	2	2	2	2	2	2	2	2	2	2	2	2	2	2	2
80	4	3	3	3	3	3	3	3	3	3	3	3	2	2	2	2	2	2	2	2	2	2	2	2	2
75	4	4	4	3	3	3	3	3	3	3	3	3	3	3	2	2	2	2	2	2	2	2	2	2	2
70	4	4	4	4	4	3	3	3	3	3	3	3	3	3	3	3	2	2	2	2	2	2	2	2	2
65	4	4	4	4	4	4	4	3	3	3	3	3	3	3	3	3	3	3	2	2	2	2	2	2	2
60	5	5	4	4	4	4	4	4	4	3	3	3	3	3	3	3	3	3	3	3	2	2	2	2	2
55	5	5	5	5	4	4	4	4	4	4	4	3	3	3	3	3	3	3	3	3	3	3	2	2	2
50	6	6	5	5	5	5	4	4	4	4	4	4	4	3	3	3	3	3	3	3	3	3	3	3	2
45	6	6	6	6	5	5	5	5	4	4	4	4	4	4	4	3	3	3	3	3	3	3	3	3	3
40	7	7	6	6	6	6	5	5	5	5	4	4	4	4	4	4	4	3	3	3	3	3	3	3	3
35	8	8	7	7	6	6	6	6	5	5	5	5	4	4	4	4	4	4	4	3	3	3	3	3	3
30	10	9	8	8	7	7	6	6	6	6	5	5	5	5	4	4	4	4	4	4	4	3	3	3	3
25	12	11	10	9	8	8	7	7	6	6	6	6	5	5	5	5	4	4	4	4	4	4	4	3	3
20	14	13	12	11	10	9	8	8	7	7	6	6	6	6	5	5	5	5	4	4	4	4	4	4	4
15	18	16	14	13	12	11	10	9	8	8	7	7	6	6	6	6	5	5	5	5	4	4	4	4	4
10	26	22	18	16	14	13	12	11	10	9	8	8	7	7	6	6	6	6	5	5	5	5	4	4	4
DEAD LOAD (PSF)	1	2	3	4	5	6	7	8	9	10	11	12	13	14	15	16	17	18	19	20	21	22	23	24	25

How to use Estimating Table:

1. Determine project specific cladding design wind pressure (psf) and cladding system dead load (psf)
2. Find the corresponding design wind load in the left most column (round up to the nearest increment)
3. Find the corresponding design dead load in the bottom row (round up to the nearest increment)
4. Find the intersecting point on the table to determine the number of square footage each thermal clip can support.
5. Divide the project cladding square footage by the number pulled from the table to determine the approximate number of clips required for the project.

Notes:

1. This table is based on the thermal clips being attached to1500 psi min prism strength LW,MW, or NW hollow concrete masonry
2. This table is based on the thermal clips being attached to the hollow core concrete masonry units wall with (2) 1/4" Hilti KWIK-CON II+ Concrete screw at 3" O.C. vertical spacing with a 1" nominal embedment depth.
3. This table is based on the use of 3 3/4" deep x 4" long thermal clips.
4. This table is based on the thermal clips being oriented with the length of clips running vertically.
5. This table is based on thermal clip capacity and does not account for specific support requirements of various cladding systems & joineries that may have an impact on the required clip quantity for the project.
6. Although combinations of the lower pressures indicate a relatively high square footage per clip, most cladding systems will require more clips than indicated for adequate support.

TECHNOFORM

Prepared by:
Wheaton & Sprague Engineering, Inc.
wheatonsprague.com

Technoform North America, Inc.
1755 Enterprise Parkway, Suite 300
Twinsburg, Ohio 44087
(330) 487-6600 | technoformclipsystem.com
MTKE-09 06.2020 ©2020 Technoform